TRACE 3-D Documentation

LA-UR-97-886

TRACE 3-D Documentation

by
K. R. Crandall
and
D. P. Rusthoi

Third Edition
May 1997

Second Edition LA-UR-90-4146 Issued December 1990
First Edition LA-11054-MS Issued August 1987

Los Alamos National Laboratory
Los Alamos, New Mexico 87545

This document was produced under a U.S. government contract (W-7405-ENG-36) by the Los Alamos National Laboratory, which is operated by the University of California for the U.S. Department of Energy.

©1987, 1990, 1997 by The Regents of the University of California. All rights reserved.
First Edition published August 1987. Second Edition 1990. Third Edition 1997.

Printed in the United States of America

TABLE OF CONTENTS

ABSTRACT..... 1

1.0 INTRODUCTION..... 1

2.0 GENERAL DESCRIPTION 3

3.0 COORDINATE SYSTEM AND UNITS 4

4.0 TRANSPORT SYSTEM ELEMENTS..... 5

5.0 DYNAMICS CALCULATIONS 5
- 5.1 Elements Having Zero Length..... 9
- 5.2 Elements Having Length, Constant Fields, and No Energy Gain 9
- 5.3 Elements Having Length, Varying Fields and/or Energy Change 9

6.0 TRANSFER MATRICES 9
- 6.1 Drift (L) NT=1..... 10
- 6.2 Thin Lens (f_x , f_y , f_z) NT=2..... 10
- 6.3 Quadrupole (B', l , dx or $d\theta$, dy , of) NT=3 11
- 6.4 PMQ (B', l , r_i , r_o) NT=4..... 12
- 6.5 Solenoid (B, l) NT=5..... 12
- 6.6 Doublet (B', l , d) NT=6..... 13
- 6.7 Triplet (B'_o , l_o , d , B'_i , l_i) NT=7..... 13
- 6.8 Bending Magnet (α , ρ , n , vf) NT=8 14
- 6.9 Edge Angle on Bending Magnet (β , ρ , g , K_1 , K_2) NT=9..... 15
- 6.10 RF Gap (E_0TL , ϕ_s , egf , dWf , h) NT=10..... 16
- 6.11 RFQ Cell (V/r_0^2 , AV , L , ϕ_0 , $type$) NT=11 18
- 6.12 RF Cavity (E_0 , L , ϕ_0) NT=12..... 21
- 6.13 Tank (E_0T, L , ϕ_d , nc) NT=13 22
- 6.14 Wiggler (L , B , g , l , s) NT=14..... 23
- 6.15 Rotation & Translation (Θ , $plane$, d_1 , d_2) NT=15 23
- 6.16 Repeat (n) NT=16..... 24
- 6.17 User 1 (l) NT=17, User 2 (l) NT=18..... 24

7.0 SPACE-CHARGE IMPULSES 24

8.0 USER INSTRUCTIONS..... 26

9.0 INPUT VARIABLES....28
9.1 Transport System....28
9.2 Beam Characteristics....28
9.3 Control Parameters....29
9.4 Matching Parameters....29
9.5 Graphics Scales....32
9.6 Print Parameters....33
9.7 Other Parameters....33

10.0 DESCRIPTION OF COMMANDS....33
10.1 "A" ADD Command....34
10.2 "B" BEAM Command....34
10.3 "C" CONVERT Command....34
10.4 "D" DELETE Command....35
10.5 "E" END Command....35
10.6 "F" PHASE Command....35
10.7 "G" GO / GRAPH Command....36
10.8 "H" HELP Command....36
10.9 "I" INPUT Command....36
10.10 "J" PROJECTION Command....37
10.11 "K" PERIODIC Command....37
10.12 "L" ELLIPSE Command....37
10.13 "M" MATCH Command....38
10.14 "N" MATCH Command....39
10.15 "O" MISMATCH Command....39
10.16 "P" PRINT Command....39
10.17 "Q" QUERY Command....40
10.18 "R" R-MATRIX Command....40
10.19 "S" SAVE Command....40
10.20 "T" TRACE Command....41
10.21 "U" USER Command....41
10.22 "V" VARIABLES Command....42
10.23 "W" W-Φ Command....42
10.24 "X" EXCHANGE Command....42
10.25 "Y" NOTATION Command....43
10.26 "Z" SIGMA Command....43
10.27 "!" UNMATCH Command....44
10.28 "@" APERTURE Command....44
10.29 "#" NEWFILE Command....45
10.30 "&" COMMENT Command....45
10.31 "*" CENTROID Command....45
10.32 "?" MINI-HELP Command....46

11.0 EXAMPLES....46
11.1 Matching Between a 400-MHz RFQ and DTL (Example A)....46
11.2 Matching Between an 80-MHz RFQ and DTL (Example B)....58

11.3 High-Energy Transport with Offset Beam (Example C) 62

12.0 ACKNOWLEDGMENTS 64

APPENDICES

APPENDIX A: THE σ-MATRIX 65

APPENDIX B: TWISS PARAMETERS AND THEIR RELATIONSHIPS TO σ-MATRIX ELEMENTS 69

APPENDIX C: MISMATCH FACTOR 71

APPENDIX D: RMS EMITTANCE AND THE EQUIVALENT UNIFORM BEAM 73

APPENDIX E: FIELD FORMULA FOR PERMANENT-MAGNET QUADRUPOLE (PMQ) 75

APPENDIX F: EMITTANCE INCREASE IN AN RF GAP 78

APPENDIX G: ELECTROMAGNETIC FIELDS IN CYLINDRICAL CAVITIES 81

APPENDIX H: COUPLED CAVITY TANKS 85

APPENDIX I: TRANSVERSE EMITTANCE INCREASE FROM CHROMATIC ABERRATIONS 89

APPENDIX J: CALCULATION OF TRANSVERSE EMITTANCES FOR BEAM-WIDTH MEASUREMENTS AT THREE LOCATIONS 92

APPENDIX K: NOTES ON TRACE 2-D 93

APPENDIX L: TRACE 3-D GRAPHICS 97

APPENDIX M: SPECIAL MACINTOSH VERSION OF TRACE 3-D 99

APPENDIX N: WAKEFIELDS IN THE TRACE 3-D CODE 101

APPENDIX O: TRACE 3-D ON-LINE HELP PAGES 102

TABLES

TABLE I: TRACE 3-D Transport Elements……6

TABLE II: TRACE 3-D Transport Element Parameter Definitions……7

TABLE III: Space-Charge Form Factor ……25

TABLE IV: Commands Recognized By TRACE 3-D ……27

TABLE V: Types Of Matching In TRACE 3-D……30

TABLE K-1: TRACE 2-D Transport Elements……94

TABLE L-1: TRACE 3-D Graphics Subroutines……97

TRACE 3-D DOCUMENTATION

ABSTRACT

TRACE 3-D is an interactive beam-dynamics program that calculates the envelopes of a bunched beam, including linear space-change forces, through a user-defined transport system. TRACE 3-D provides an immediate graphics display of the beam envelopes and phase-space ellipses, and accommodates fourteen different types of fitting or beam-matching options. This report describes the beam-dynamics calculations and gives detailed instruction for using the code. Several examples are described in detail.

1.0 INTRODUCTION

TRACE 3-D is an interactive program that calculates the envelopes of a bunched beam, including linear space-charge forces, through a user-defined transport system. The transport system may consist of the following elements: (1) drift, (2) thin lens, (3) quadrupole, (4) permanent-magnet quadrupole or PMQ, (5) solenoid, (6) doublet, (7) triplet, (8) bending magnet, (9) edge angle for bending magnet, (10) RF gap, (11) radiofrequency quadrupole or RFQ cell, (12) RF cavity, (13) coupled-cavity tank, (14) wiggler, (15) rotation/translation, and (16) repeat. There is provision for two user-defined elements.

The beam is represented by a 6x6 σ-matrix (introduced by the TRANSPORT program[1]) defining a hyperellipsoid in six-dimensional phase space (see Appendix A). The projection of this hyperellipsoid on any two-dimensional plane is an ellipse that defines the boundary of the beam in that plane. The most useful projection planes are the transverse and longitudinal phase planes in which the ellipses are characterized by the Courant-Snyder (or Twiss) parameters and emittances (see Appendix B). Using a sequence of matrix transformations, the beam can be "followed" between any two elements. The user can change any parameter and observe the effect on the beam envelopes and on the output-beam ellipses. Also, several element-fitting and beam-matching options are available that determine values for the beam-ellipse parameters or for specified transport-system parameters (such as quadrupole gradients) to meet specified objectives.

[1] K. L. Brown and S. K. Howry, "TRANSPORT/360," Stanford Linear Accelerator Center report 91 (1970).

An example where TRACE 3-D is extremely useful is the problem of matching the beam from the exit of an RFQ into the entrance of a drift-tube linac (DTL). This matching is a three-stage process accomplished easily and quickly by TRACE 3-D as follows:

1) The first stage in the process is to determine the matched-beam characteristics at the output of the RFQ by treating the last two RFQ cells as one period in a periodic-focusing system. Because of space-charge forces that couple the dynamics in the three phase planes, this task involves solving six simultaneous nonlinear equations.

2) The second stage is to find the correct input beam for the DTL by treating the first two DTL cells as one period in a periodic-focusing system (one DTL cell consists of the following sequence of elements: quadrupole, drift, RF gap, drift, and quadrupole).

3) The final stage is to design a transport system between the RFQ and DTL that will transform the matched beam exiting the RFQ into the matched beam required by the DTL. Quadrupole strengths and drift lengths in the transport system can be automatically varied by TRACE 3-D in an effort to find a solution to the matching problem. A satisfactory solution is found when a calculated mismatch factor (see Appendix C) is less than a specified convergence criterion (default = 0.0001).

TRACE 3-D provides an immediate graphics display, including the beam envelopes and the phase-space ellipses in the transverse and longitudinal dimensions. This feature, along with the interactive capability, makes the program a learning aid as well as a useful design tool.

TRACE 3-D is an evolution of earlier two-dimensional versions. The original TRACE[2] was written in 1973 and was developed for use on the controls computer of LAMPF (now called LANSCE, the Los Alamos Neutron Science Center accelerator). A modified version[3] was written for the controls computer of the CERN[4] linac in 1977; in 1979, the CERN version was adapted to the Pion Generator for Medical Irradiations (PIGMI) controls system at Los Alamos. This version was expanded extensively and adapted for use on the CDC-7600 and the CRAY computers at the central computer facility at Los Alamos as well as for use on the VAX computer and SUN workstations, and is documented in a Los Alamos report.[5]

The structure of TRACE 3-D, written in Standard FORTRAN 77, allows the code to be easily modified and expanded. Interaction with the program—now available on most platforms (PC, Macintosh, VAX, CRAY, HP, SUN)—works principally in either a Tektronix 4000-

---

2 K. R. Crandall, "TRACE: An Interactive Beam-Transport Program," Los Alamos Scientific Laboratory report LA-5332 (October 1973).

3 K. R. Crandall, "TRACE: An Interactive Beam-Transport Program for Unbunched Beams," and "Addendum to Program TRACE," CERN/PS/LIN/Note 77-3, Geneva, Switzerland (February 1977).

4 European Organization for Nuclear Research (laboratory located in Switzerland)

5 K. R. Crandall and D. P. Rusthoi, "Documentation for TRACE: An Interactive Beam-Transport Code," Los Alamos National Laboratory report LA-10235-MS (January 1985).

series terminal-emulation mode using the Tektronix Plot-10 Terminal Control System, or in a windows mode with replacement graphics routines that produce postscript and run a postscript viewer. The program is easily adapted to other graphics software by replacing the plotting subroutines with calls to any graphics package that draws lines, writes character strings, and allows a mechanism for interaction. See Appendix L for more information on the graphics routines.

2.0 GENERAL DESCRIPTION

The basic assumption of TRACE 3-D is that all forces are linear or can be linearized. If the six coordinates of a particle are known at some location s_1 along a transport system, then at s_2, the coordinates can be calculated by a single matrix multiplication. That is,

$$\dot{x}(s_2) = R\dot{x}(s_1)$$

where $\dot{x}(s)$ is a 6x1 column vector of the coordinates at location s, and R is a 6x6 matrix whose elements depend on the transport elements between s_1 and s_2 and on the size of the beam (for computing space-charge forces) in this interval. The R-matrix is referred to as the transfer matrix between locations s_1 and s_2. Transfer matrices representing particle transport over long distances are determined by a sequence of matrix multiplications of transfer matrices representing particle transport over smaller intervals that comprise the total transport distance.

For the space-charge forces to be linear, one must postulate a beam having a uniform charge distribution in real space. (The electric-field components inside a uniformly charged ellipsoid are given in Section 7.0.) Although real life is rarely so accommodating, it has been shown that for distributions having ellipsoidal symmetry, the evolution of the rms-beam envelope depends almost exclusively on the linearized part of the self-forces.[6] Consequently, for calculational purposes, the "real beam" may be replaced by an equivalent uniform beam having identical rms properties (see Appendix D). The total emittance of the equivalent uniform beam (the beam followed by TRACE 3-D) in each phase plane is *five times the rms emittance* in that plane, and the displayed beam envelopes are $\sqrt{5}$-times their respective rms values.[7] Real beams have ill-defined boundaries; and in general, one can expect a few percent (<10%) of the particles in a real beam to be outside the boundaries displayed by TRACE 3-D.

If the transfer matrix between s_1 and s_2 is known, and if the beam matrix at s_1 is known, then the beam matrix at s_2 is calculated by the following equation:

---

6 F. Sacherer, "RMS Envelope Equation with Space Charge," CEPN/SI/Intemal report 70-12, Geneva, Switzerland (1970).

7 For TRACE 2-D information, see Appendix K

$$\sigma(s_2) = R\sigma(s_1)R^T \ ,$$

where R^T denotes the transpose of R. The dynamics calculations in TRACE 3-D are done by a sequence of transformations as specified above. Starting with an initial σ-matrix, a transfer matrix is constructed from the external forces for a small transport interval and a new σ-matrix is calculated. The size of the beam is obtained from elements of the σ-matrix, and linear space-charge forces are calculated using the beam size. An R-matrix is constructed for the space-charge impulse, and a new σ-matrix is calculated. This process is repeated until the beam has been followed through the specified elements.

At the beginning of a calculation, initial phase-space ellipses are displayed at the graphics terminal. At each step, the beam boundaries in real space are displayed, allowing the user to visualize how the beam is behaving. At the end, the final phase-space ellipses are displayed.

3.0 COORDINATE SYSTEM AND UNITS

The internal coordinates and their units are

$$\dot{x} = \begin{bmatrix} x & \text{(mm)} \\ x' & \text{(mrad)} \\ y & \text{(mm)} \\ y' & \text{(mrad)} \\ z & \text{(mm)} \\ \Delta p/p & \text{(mrad)} \end{bmatrix}$$

where x, y, and z are horizontal, vertical, and longitudinal displacements from the center of the beam bunch (assumed to be on the equilibrium orbit), x' and y' are the relative rates at which the particle is moving away from the horizontal and vertical axes, and $\Delta p/p$ is the relative difference in the particle's longitudinal momentum from the longitudinal momentum of the center of the beam bunch. For input and output, however, z and $\Delta p/p$ are replaced by $\Delta\phi$ and ΔW, the phase and energy displacements in degrees and keV. The relationships between these longitudinal coordinates are

$$z = -\frac{\beta\lambda}{360}\Delta\phi \ ,$$

and

$$\frac{\Delta p}{p} = \frac{\gamma}{\gamma+1}\frac{\Delta W}{W} \ ,$$

where β and γ are the usual relativistic parameters, λ is the free-space wavelength of the RF, and W is the kinetic energy in million electron volts (MeV) at the beam center. Phase and energy coordinates are more normal coordinates for discussion of input/output parameters of accelerator-related transport systems than are z and $\Delta p/p$; however, internal calculations are simplified by using the z and $\Delta p/p$ coordinates.

The units of the coordinate system define the units of the transfer-matrix elements, which are either dimensionless, in meters (m), or in inverse meters (m^{-1}):

$$\begin{bmatrix} 1 & m & 1 & m & 1 & m \\ m^{-1} & 1 & m^{-1} & 1 & m^{-1} & 1 \\ 1 & m & 1 & m & 1 & m \\ m^{-1} & 1 & m^{-1} & 1 & m^{-1} & 1 \\ 1 & m & 1 & m & 1 & m \\ m^{-1} & 1 & m^{-1} & 1 & m^{-1} & 1 \end{bmatrix}$$

4.0 TRANSPORT SYSTEM ELEMENTS

Each transport element is defined by a "type code" and by five or fewer parameters. The transport elements are summarized in Table I and the parameters used for each transport element are defined in Table II. Unless otherwise specified, all conventions assume a positive beam, all lengths are in millimeters (mm), all magnetic-field gradients are in tesla/meter (T/m) units, and all angles are in degrees (°). For positive beams, positive magnetic gradients are focusing in the horizontal plane and defocusing in the vertical plane.

5.0 DYNAMICS CALCULATIONS

The beam matrix is followed through a sequence of transport elements by creating transfer matrices for small segments and calculating as follows:

$$\sigma = R\sigma_0 R^T \quad .$$

This calculation is done in several different ways, depending on the type of element.

TABLE I: TRACE 3-D Transport Elements

Element	Type Code*	Parameters**
Drift	1	L
Thin lens	2	f_x, f_y, f_z
Quadrupole	3	B', l, dx or $d\theta$, dy, of
PMQ	4	B', l, r_i, r_o
Solenoid	5	B, l
Doublet	6	B', l, d
Triplet	7	B'_o, l_o, d, B'_i, l_i
Bend	8	α, ρ, n, vf
Edge	9	β, ρ, g, K_1, K_2
RF Gap	10	E_0TL, ϕ_S, egf, dWf, h
RFQ Cell	11	V/r_0^2, AV, L, ϕ_0, $type$
RF cavity	12	E_0, L, ϕ_0
Tank	13	E_0T, L, ϕ_d, n_C
Wiggler	14	L, B, g, l, s
Rotation & Translation	15	Θ, $plane$, d_1, d_2
Repeat	16	n
User 1	17	l
User 2	18	l

* The type codes are stored in the NT array
** The parameters for each element are stored in the A array

TABLE II: TRACE 3-D Transport Element Parameter Definitions

Code	Element	Parameter	Definition
1	Drift	L	length (mm)
2	Thin lens	f_x f_y f_z	focal length in *x*-direction (mm) focal length in *y*-direction (mm) focal length in *z*-direction (mm)
3	Quadrupole	B' l dx or $d\theta$ dy of	magnetic-field gradient (T/m) effective length (mm) offset in *x* or rotation about *z*, max or limit (mm or deg) offset in *y*, max or limit (mm) offset flag: 0 = no offset, 1 = displacement, 2 = rotation (negative flag generates random numbers)
4	PMQ	B' l r_i r_o	maximum magnetic-field gradient (T/m)* physical length of PMQ (mm) inner radius (mm) outer radius (mm)
5	Solenoid	B l	magnetic field (Gauss) effective length (mm)
6	Doublet	B' l d	magnetic-field gradient (T/m) in upstream quadrupole effective length of each quadrupole (mm) distance between quadrupoles (mm)
7	Triplet	B'_o l_o d B'_i l_i	magnetic-field gradient (T/m) in both outer quadrupoles effective length of outer quadrupole (mm) distance between inner and each outer quadrupole (mm) magnetic-field gradient (T/m) in inner quadrupole effective length of inner quadrupole (mm)
8	Bend	α ρ n vf	angle of bend in horizontal plane (deg) radius of curvature of central trajectory (mm) field-gradient index vertical flag (0 = horizontal bend)
9	Edge	β ρ g K_1 K_2	pole-face rotation angle (deg) radius of curvature of bend (mm) total gap of magnet (mm) fringe-field factor (default = 0.45) fringe-field factor (default = 2.8)

* See Section 6.4 or Appendix E.

TABLE II: TRACE 3-D Transport Element Parameter Definitions (Con't)

Code	Element	Parameter	Definition
10	RF Gap	E_0TL ϕ_s *egf* *dWf* *h*	effective gap voltage (MV) phase of RF (deg) emittance growth flag energy gain flag (0 = no gain, 1 = gain) harmonic (default = 1)
11	RFQ Cell	V/r_0^2 *AV* *L* ϕ_0 *type*	maximum intervane potential difference divided by square of average vane displacement (kV/mm^2) product of acceleration efficiency and maximum intervane voltage (kV) cell length (mm) phase of RF (deg)* 0 = standard cell, no acceleration 1 = standard cell with acceleration 2 = fringe field, no acceleration 3 = fringe field with acceleration
12	RF cavity	E_0 *L* ϕ_0	average accelerating field (MV/m) length (mm) phase of RF (deg)**
13	Tank	E_0T *L* ϕ_d n_c	effective acceleration gradient (MV/m) length (mm) injection/exit phase (deg) number of identical cavities
14	Wiggler	*L* *B* *g* *l* *s*	total length of wiggler element (mm) magnetic field (Gauss) of the magnets total gap (mm) of the magnets length (mm) of each magnet distance (mm) between magnets
15	Rotation & Translation	Θ *plane* d_1 d_2	angle through which coordinate system is rotated in chosen plane (deg) 1 = *x*-*y* plane, 2 = *y*-*z* plane, 3 = *z*-*x* plane (default = 1) *dx* for plane = 1, *dy* for plane = 2, *dx* for plane = 3 *dy* for plane = 1
16	Repeat	*n*	sequence number of element being repeated
17	User 1	*l*	total length of user-defined element
18	User 2	*l*	total length of user-defined element

* See Section 6.11

** See Section 6.12

5.1 Elements Having Zero Length

For elements having zero length, the *R*-matrix has only three nonzero off-diagonal elements—the impulses to be applied in the three orthogonal planes. Elements of this type are thin lenses, RF gaps, and edge angles on bending magnets.

5.2 Elements Having Length, Constant Fields, and No Energy Gain

Each element is divided into an integral number of segments (NS). An *R*-matrix is constructed for a half-segment. For each segment, the beam is transformed to the center of the segment using the *R*-matrix, a space-charge impulse is applied, and the beam is transformed to the end of the segment using the *R*-matrix. Elements of this type are field-free drifts, hard-edge quadrupoles, bending magnets, and solenoids. Doublets and triplets are composite elements of drifts and quadrupoles.

5.3 Elements Having Length, Varying Fields and/or Energy Change

Again, each element is divided into an integral number of segments. For each segment, the beam is transformed by a drift-impulse-drift, meaning that the beam is given a drift transformation to the center of the segment, an impulse that is due to the element and space-charge, and a drift transformation to the end of the segment. Energy changes and phase shifts, if any, are also calculated. Elements of this type are permanent-magnet quadrupoles (PMQs), RFQ cells, RF cavities, and tanks. In some elements, it is possible to calculate an emittance growth. For example, an RF gap will cause transverse and longitudinal emittance growth because of the phase spread in the beam.

6.0 TRANSFER MATRICES

In this report, the 6x6 transfer matrices will be partitioned into nine 2x2 matrices:

$$R = \left[\begin{array}{c:c:c} R_{xx} & R_{xy} & R_{xz} \\ \hdashline R_{yx} & R_{yy} & R_{yz} \\ \hdashline R_{zx} & R_{zy} & R_{zz} \end{array}\right]$$

Most of the elements are usually zero, and only the nonzero elements will be defined.

The transfer matrices generated for each element, or for each segment of length, Δs, are defined below. In this section, β and γ are the usual relativistic parameters. For elements that involve a change in energy, the subscripts i and f will denote values before and after the energy change, and a bar over a quantity will denote an average value.

6.1 Drift (L) NT=1*

For a drift length Δs in meters, the nonzero elements of the R-matrix are as follows:

$$R_{xx} = R_{yy} = \begin{bmatrix} 1 & \Delta s \\ 0 & 1 \end{bmatrix}$$

$$R_{zz} = \begin{bmatrix} 1 & \Delta s/\gamma^2 \\ 0 & 1 \end{bmatrix}$$

The γ^2 in the denominator of the 1,2 element of R_{zz} is present because

$$\Delta v/v = (\Delta p/p)/\gamma^2$$

6.2 Thin Lens (f_x, f_y, f_z) NT=2

The focal lengths specified by the thin-lens element are in millimeters (mm); therefore, the submatrices are as follows:

$$R_{xx} = \begin{bmatrix} 1 & 0 \\ \frac{-1000}{f_x} & 1 \end{bmatrix}$$

$$R_{yy} = \begin{bmatrix} 1 & 0 \\ \frac{-1000}{f_y} & 1 \end{bmatrix}$$

$$R_{zz} = \begin{bmatrix} 1 & 0 \\ \frac{-1000\gamma^2}{f_z} & 1 \end{bmatrix}$$

For any focal length that is zero, the corresponding submatrix is the identity matrix.

* NT is a type code. See Section 9.1 or Table I

6.3 Quadrupole (*B′*, *l* , *dx* or *dθ* , *dy* , *of*) NT=3

For a quadrupole gradient *B′*, the 2x2 transfer matrices in the focusing and defocusing planes are as follows:

$$F = \begin{bmatrix} cos(k\Delta s) & \frac{1}{k} sin(k\Delta s) \\ -k\, sin(k\Delta s) & cos(k\Delta s) \end{bmatrix}$$

and

$$D = \begin{bmatrix} cosh(k\Delta s) & \frac{1}{k} sinh(k\Delta s) \\ k\, sinh(k\Delta s) & cosh(k\Delta s) \end{bmatrix}$$

where

$$k = \left[\left| \frac{B'}{B\rho} \right| \right]^{1/2},$$

The quantity $B\rho$ is called the magnetic rigidity of the particle, defined by

$$B\rho = \frac{m_0 c \beta \gamma}{q}$$

where q and m_0 are the charge and rest mass of the particle, and c is the velocity of light. The dimensions of Δs and k are meters and meters^{-1}, respectively. When $B'/B\rho$ is positive, $R_{xx} = F$ and $R_{yy} = D$; when $B'/B\rho$ is negative, $R_{xx} = D$ and $R_{yy} = F$. In either case, R_{zz} is the same as for a drift:

$$Rzz = \begin{bmatrix} 1 & \Delta s/\gamma^2 \\ 0 & 1 \end{bmatrix}$$

The last three parameters of the quadrupole element concern misalignment (rotation or translation) in the transverse *(x-y)* plane. If the offset flag is set to zero (*of* = 0), there is no misalignment. If *of* = 1, the misalignment is translation in the *x-y* plane with the third and fourth parameters specifying the offset (in millimeters), *dx* and *dy*, respectively. If *of* = 2, the misalignment is rotation about the *z*-axis with the third parameter now becoming *dθ*, specifying the rotation (in degrees). If *of* is entered as a negative number (–1 or –2), the program generates random misalignments, considering the specified values in the third and fourth parameters to be maximum limits.

6.4 PMQ (B', l , r_i , r_o) NT=4

The field of a rare-earth cobalt (REC) permanent-magnet quadrupole (PMQ) of standard design is known analytically and has been verified experimentally.[8] A discussion of the field formula is given in Appendix E. Typically, PMQs are quite short and have strong pole-tip fields, resulting in "soft-edge" fringe fields that extend beyond the physical edge of the quadrupole for a distance two-to-three times the inner quadrupole radius. When calculating the field gradient within or near a PMQ, the gradients of all PMQs in the vicinity are taken into account by TRACE 3-D and are used for determining the total superimposed gradient.

The field gradient B', in tesla per meter (T/m), is determined by dividing the total integrated field (usually that which is measured—magnetic field gradient times the effective length) by the physical length of the quadrupole, l. This is the B' input value for TRACE 3-D. The inner and outer radii, r_i and r_o, refer to the dimensions, in millimeters, of the ring of permanent magnet material inside the quadrupole and are used to compute the fringe field function (see Appendix E).

The transfer matrices for the impulses that are due to a field gradient B' acting over the distance Δs are as follows:

$$Rxx = \begin{bmatrix} 1 & 0 \\ -k^2\Delta s & 1 \end{bmatrix}$$

$$Ryy = \begin{bmatrix} 1 & 0 \\ k^2\Delta s & 1 \end{bmatrix}$$

where k^2 is defined as

$$k^2 = \frac{B'}{B\rho} \ ,$$

and has units of inverse meters squared (Δs is in meters).

6.5 Solenoid (B, l) NT=5

A derivation of the solenoid transformation is discussed in A. P. Banford.[9] In TRACE 3-D, the solenoid is divided into small segments of length, Δs, and a submatrix constructed for the entry, central, and exit sections. This construction is legitimate because all the internal (and

8 K. Halbach, "Physical and Optical Properties of REC Magnets," *Nucl. Instrum. Meth.* **187**, 109-117 (1981).
9 A. P. Banford, *The Transport of Charged Particle Beams*, (E. & F. N. Spon Ltd., London,1966).

nonexistent) entry and exit sections cancel each other. The solenoid is divided into small segments so that space-charge forces can be calculated and applied.

The transfer submatrices are as follows:

$$R_{xx} = R_{yy} = \begin{bmatrix} C^2 & \frac{1}{k}SC \\ -kSC & C^2 \end{bmatrix}$$

$$R_{xy} = -R_{yx} = \begin{bmatrix} SC & \frac{1}{k}S^2 \\ -kS^2 & SC \end{bmatrix}$$

$$R_{zz} = \begin{bmatrix} 1 & \Delta s/\gamma^2 \\ 0 & 1 \end{bmatrix}$$

where

$$k = \frac{B}{2B\rho} \ ,$$

$$C = cos(k\Delta s) \ ,$$

and

$$S = sin(k\Delta s) \ .$$

The dimensions of Δs and k are meters (m) and inverse meters (m^{-1}), respectively.

6.6 Doublet *(B′, l , d)* NT=6

In a doublet, the beam is successively transported with matrices already described for a quadrupole in Section 6.3 defined by *B′, l,* a drift length *d*, and another quadrupole defined by *–B′, l.*

6.7 Triplet (B'_o , l_o , d , B'_i , l_i) NT=7

In a triplet, the beam is transported with matrices already described in Section 6.3. The outer quadrupoles are defined by B'_o and l_o , and the inner quadrupole is defined by B'_i and l_i. The two drifts between outer and inner quadrupoles have length *d*.

6.8 Bending Magnet (α, ρ, *n*, *vf*) NT=8

By definition, a positive bend (denoted by $\alpha > 0$) bends the particles to the right in the horizontal plane (or upwards for a vertical bend), regardless of the sign of the charge on the particle; a negative α bends particles to the left (or downwards for a vertical bend). The bending radius of the equilibrium orbit is ρ, and *n* is the field index, given by

$$n = -\left[\frac{\rho}{B_y}\frac{\partial B_y}{\partial x}\right]_{x=0,y=0} ,$$

where B_y is the vertical component of the magnetic field strength. (The sign of ρ should agree with the sign of α; if not, the sign of α will take precedence.) The bending radius ρ is related to B_y by the following:

$$\rho = \frac{m_0 c\beta\gamma}{qB_y} .$$

The transfer matrix for a horizontal sector magnet is as follows:

$$Rxx = \begin{bmatrix} C_x & \frac{1}{k_x}S_x \\ -k_x S_x & C_x \end{bmatrix}$$

$$Ryy = \begin{bmatrix} C_y & \frac{1}{k_y}S_y \\ -k_y S_y & C_y \end{bmatrix}$$

$$Rzz = \begin{bmatrix} 1 & -\frac{1}{\rho^2}(k_x \Delta s\beta^2 - S_x)/k_x^3 + \Delta s(1-\frac{1}{\rho^2 k_x^2})/\gamma^2 \\ 0 & 1 \end{bmatrix}$$

$$Rxz = \begin{bmatrix} 0 & h(1-C_x)/k_x^2 \\ 0 & hS_x/k_x \end{bmatrix}$$

$$Rzx = \begin{bmatrix} -hS_x/k_x & -h(1-C_x)/k_x^2 \\ 0 & 0 \end{bmatrix}$$

where

$$h = \frac{1}{|\rho|}\frac{\alpha}{|\alpha|} ,$$

$$k_x = \sqrt{(1-n)h^2} \ ,$$

$$k_y = \sqrt{nh^2} \ ,$$

$$C_x = cos(k_x \Delta s) \ ,$$

$$S_x = sin(k_x \Delta s) \ ,$$

$$C_y = cos(k_y \Delta s) \ ,$$

$$S_y = sin(k_y \Delta s) \ ;$$

also,

$$\Delta s = |\rho| \Delta\alpha$$

is the length of the segment (in meters) along the equilibrium orbit, and k_x and k_y are in m^{-1}.

The final parameter for the bend is the vertical flag, *vf*. If $vf = 0$, the bend is in the horizontal plane. If $vf \neq 0$, the bend is in the vertical plane. A positive bend ($\alpha > 0$) bends the beam upward in the vertical plane as previously stated.

6.9 Edge Angle on Bending Magnet (β , ρ , g , K_1 , K_2) NT=9

An edge angle is treated as a thin lens, with the transfer matrices as follows:

$$Rxx = \begin{bmatrix} 1 & 0 \\ \frac{1000}{\rho} tan\beta & 1 \end{bmatrix}$$

$$Ryy = \begin{bmatrix} 1 & 0 \\ \frac{-1000}{\rho} tan(\beta - \psi) & 1 \end{bmatrix}$$

where ρ is the radius of curvature (in mm), and the fringe-field correction angle ψ is defined by[10]

$$\Psi = K_1 \frac{g}{\rho} \left[\frac{1+sin^2\beta}{cos\beta} \right] \left[1 - K_1 K_2 \left(\frac{g}{\rho} \right) tan\beta \right] \ .$$

Whether or not an edge angle is focusing or defocusing depends not only on the angle β, but also on the sign of ρ, so caution is advised. The correction angle ψ is also dependent on

[10] K. L. Brown, "A First- and Second-Order Matrix Theory for the Design of Beam Transport Systems and Charged Particle Spectrometers," Stanford Linear Accelerator Center report 75 (1969)

the signs of β and ρ. If K_1 is zero, the default value of 0.45 is used for K_1; if K_2, is zero, its default value is 2.8. Note that fringe-field calculations are contained in this element; therefore, to include fringe-field calculations for a bending magnet (even with zero edge angle), this element must be present on both sides of the magnet. In the case of a vertical bend, the gap, *g*, should be entered as a negative number.

6.10 RF Gap (E_0TL , ϕ_s , *egf* , *dWf* , *h*) NT=10

In a radiofrequency or RF gap, as in RFQ cells, coupled-cavity cells, and coupled-cavity tanks, the energy of the beam will normally change. (Note that there are situations when one does not want to consider acceleration but only the focusing and defocusing properties in the gap; e.g., when computing the matched input in a periodic system.) When the beam energy is changed, the transverse emittances will change. In this situation, it is convenient to construct the transfer matrix in three separate stages:

1. A transformation that changes the initial *x'*, *y'*, and $\Delta p/p$ to $(\beta\gamma)_x$, $(\beta\gamma)_y$, and $\Delta(\beta\gamma)_z$, by multiplying by the initial value of $(\beta\gamma)_z$, the longitudinal component of the normalized momentum.
2. An impulse transformation that calculates the changes in $(\beta\gamma)_x$, $(\beta\gamma)_y$, and $\Delta(\beta\gamma)_z$.
3. A transformation back to the *x'*, *y'*, and $\Delta p/p$ by dividing by $(\beta\gamma)_f$, the final value of the longitudinal momentum.

For an initial kinetic energy, W_i, the normalized momentum is

$$(\beta\gamma)_i = \sqrt{\gamma_i^2 - 1} \ ,$$

where

$$\gamma_i = 1 + W_i / E_r \ ,$$

with E_r being the rest energy of the particle. If $dWf \neq 0$ (energy gain flag "on"), the energy change in the gap is given by

$$\Delta W = |q| E_0 TL \cos\phi_s \cdot dWf \ .$$

Therefore, the final energy is

$$W_f = W_i + \Delta W \ ;$$

also,

$$\gamma_f = 1 + W_f / E_r$$

and

$$(\beta\gamma)_f = \sqrt{\gamma_f^2 - 1} \ .$$

The changes in the normalized momentum components caused by the gap impulse are

$$k_x x = \frac{-\pi h|q|E_0 TL \sin\phi_s}{m_0 c^2 \overline{\beta}^2 \overline{\gamma}^2 \lambda} x$$

$$k_y y = \frac{-\pi h|q|E_0 TL \sin\phi_s}{m_0 c^2 \overline{\beta}^2 \overline{\gamma}^2 \lambda} y$$

$$k_z z = \frac{2\pi h|q|E_0 TL \sin\phi_s}{m_0 c^2 \overline{\beta}^2 \lambda} z$$

where the bars denote quantities calculated at the average energy

$$\overline{W} = W_i + \Delta W/2 \quad ,$$

and where h is the field harmonic (usually $h = 1$). The field harmonic is used if the RF gap is operated at h times the basic frequency specified by the user. The total transfer matrix for all three stages is as follows:

$$R_{xx} = \begin{bmatrix} 1 & 0 \\ 0 & (\beta\gamma)_f^{-1} \end{bmatrix} \begin{bmatrix} 1 & 0 \\ k_x & 1 \end{bmatrix} \begin{bmatrix} 1 & 0 \\ 0 & (\beta\gamma)_i \end{bmatrix}$$

$$= \begin{bmatrix} 1 & 0 \\ k_x/(\beta\gamma)_f & (\beta\gamma)_i/(\beta\gamma)_f \end{bmatrix}$$

$$R_{yy} = \begin{bmatrix} 1 & 0 \\ k_y/(\beta\gamma)_f & (\beta\gamma)_i/(\beta\gamma)_f \end{bmatrix}$$

$$R_{zz} = \begin{bmatrix} 1 & 0 \\ k_z/(\beta\gamma)_f & (\beta\gamma)_i/(\beta\gamma)_f \end{bmatrix}$$

After computing this *R*-matrix and using it to calculate the new σ-matrix, if the emittance-growth flag *(egf)* is nonzero, the elements of the new σ-matrix are adjusted, as described in Appendix F, to account for emittance growth in the gap.

6.11 RFQ Cell (V/r_0^2 , AV , L , ϕ_0 , *type*) NT=11

In an RFQ, as in a coupled-cavity cell, the RF phase changes continually as the beam moves through the element. This statement is also true of the beam energy (unless "no acceleration" is specified by *type* = 0 or 2). When the beam arrives at the end of the element, the RF phase will depend on the length of the element, and on the dynamics as the beam passes through the element. When one has a sequence of RFQ cells, or coupled-cavity cells, the phase shift between adjacent cells is 180°. Therefore, it is more practical to have the parameter ϕ_0 indicate a phase shift rather than an absolute phase. In a sequence of RFQ cells, all of the ϕ_0 parameters will be –180° except for the first cell. Before starting the dynamics calculation, TRACE 3-D sets the phase parameter ϕ to zero. When the beam arrives at the first RFQ cell, ϕ gets changed to $\phi + \phi_0$. For the first RFQ cell, ϕ_0 should be the synchronous phase for that cell (for example, –30°).

The beam matrix is followed through the element by a sequence of drift-impulse-drift transformations. The element is divided into 18 equal-length segments (if *type* = 0 or 1) or into $36L/\beta\lambda$ segments (if *type* = 2 or 3). Each of these segments is divided into half lengths of $\Delta s/2$. In each $\Delta s/2$ drift, the phase is incremented by

$$\phi = \phi + \frac{2\pi}{\beta\lambda}\frac{\Delta s}{2} \quad ,$$

where $\beta = v/c$ and λ is the free-space wavelength of the RF. If an energy change is permitted (when *type* = 1 or 3), the longitudinal electric field is calculated, and the new energy is

$$W_f = W_i + |q|E_z\Delta s \quad ,$$

and the average energy is

$$\overline{W} = \left(W_i + W_f\right)/2 \quad .$$

The transverse and longitudinal focusing or defocusing forces of the RFQ, and the space-charge defocusing forces, are calculated and applied at the center of the segment. The beam is then drifted for another $\Delta s/2$, and this process is continued throughout the element.

In a standard RFQ cell (specified by *type* = 0 or 1), the linearized electric field components are

$$E_x = \left[-\frac{V}{r_0^2} - \frac{k^2 AV}{4}\cos k\zeta\right] x \sin\phi$$

$$E_y = \left[\frac{V}{r_0^2} - \frac{k^2 AV}{4} \cos k\zeta \right] y \sin\phi$$

$$E_z = \frac{kAV}{2} \sin k\zeta \sin\phi$$

where $k = \pi/L$ and ζ is the local longitudinal coordinate within the cell, defined to be zero at the beginning (upstream end) of the cell. For each drift of length $\Delta s/2$, ζ is increased by $\Delta s/2$. As written, the expressions for E_z and E_y assume that the horizontal vanes (*x*-*z* plane) are closer to the axis at the beginning of the cell. Positive values of the V/r_0^2 parameter indicate this situation; negative values indicate that the vertical vanes are closer to the axis at the beginning of the cell. The sign of V/r_0^2 must alternate in successive RFQ cells.[11]

The changes in *x'* and *y'* that are caused by the RFQ fields, acting over the distance Δs, are as follows:

$$\Delta(x') = \frac{\Delta s |q| \sin\phi}{m_0 c^2 \bar{\beta}^2 \bar{\gamma}} \left[-\frac{V}{r_0^2} - \frac{k^2 AV}{4} \cos k\zeta \right] x$$

$$\Delta(y') = \frac{\Delta s |q| \sin\phi}{m_0 c^2 \bar{\beta}^2 \bar{\gamma}} \left[\frac{V}{r_0^2} - \frac{k^2 AV}{4} \cos k\zeta \right] y$$

where $\bar{\beta}$ and $\bar{\gamma}$ are relativistic parameters corresponding to $\bar{W}$.

The change in $\Delta p/p$ caused by a particle arriving at a particular ζ when the RF phase is $\phi+\Delta\phi$ rather than ϕ is

$$\Delta\left(\frac{\Delta p}{p}\right) = \frac{\Delta s |q|}{m_0 c^2 \bar{\beta}^2 \bar{\gamma}} \frac{\partial E_z}{\partial \phi} \Delta\phi \quad .$$

Equating the phase displacement $\Delta\phi$ to the longitudinal displacement *z*,

$$\Delta\phi = \frac{-2\pi}{\bar{\beta}\lambda} z \quad ,$$

the change in $\Delta p/p$ is

$$\Delta\left(\frac{\Delta p}{p}\right) = -\frac{\Delta s \pi |q| kAV \sin k\zeta \cos\phi}{m_0 c^2 \bar{\beta}^3 \bar{\gamma} \lambda} \quad .$$

[11] Note that for simulating PARMTEQ cells, odd PARMTEQ cells have V/r_0^2 positive, and even cells have V/r_0^2 negative.

When *type* is 2 or 3, the element is the exit fringe-field region of an RFQ linac. When the specified length *L* is 2βλ or longer, this element would be called an exit radial-matching section because the transverse phase-space ellipses would be very similar at the end of the element. Lengths shorter than βλ/2 would be used for controlling the energy change in the fringe-field region.

The electric fields are obtained from the potential function:

$$U(r,\Theta,\zeta)=\frac{V}{2}\left[AT_0(r,\zeta)+\frac{8}{(k_f r_0)^2}T_2(r,\zeta)\cos 2\Theta\right]\sin\phi \quad ,$$

where

$$T_0(r,\zeta)=\frac{3}{4}\left[I_0(k_f r)\cos(k_f\zeta)+\frac{1}{3}I_0(3k_f r)\cos(3k_f\zeta)\right] \quad ,$$

$$T_2(r,\zeta)=\frac{3}{4}\left[I_2(k_f r)\cos(k_f\zeta)+\frac{1}{27}I_2(3k_f r)\cos(3k_f\zeta)\right] \quad ,$$

and

$$k_f=\frac{\pi}{2L} \quad .$$

The modified Bessel functions I_0 and I_2 are replaced by their series expansion, dropping all terms in *r* higher than r^2:

$$I_0(k_f r)=1+(k_f r)^2/4 \;=1+\frac{k_f^2}{4}(x^2+y^2) \quad ,$$

$$I_2(k_f r)=(k_f r)^2/8 \quad .$$

Then, using the identity

$$r^2\cos 2\Theta\equiv x^2-y^2 \quad ,$$

the potential function can be rewritten in Cartesian coordinates, and the electric field components calculated by

$$\vec{E}=-\nabla U \quad .$$

The results are

$$E_x=\left[-\frac{V}{r_0^2}C_1(\zeta)-\frac{k_f^2 AV}{4}C_2(\zeta)\right]x\sin\phi \quad ,$$

$$E_y = \left[\frac{V}{r_0^2} C_1(\zeta) - \frac{k_f^2 AV}{4} C_2(\zeta) \right] y \sin\phi \quad ,$$

and

$$E_z = \frac{k_f AV}{2} S(\zeta) \sin\phi \quad ,$$

where

$$C_1(\zeta) = \frac{3}{4}\left(\cos k_f\zeta + \frac{1}{3}\cos 3k_f\zeta \right) \quad ,$$

$$C_2(\zeta) = \frac{3}{4}\left(\cos k_f\zeta + 3\cos 3k_f\zeta \right) \quad ,$$

and

$$S(\zeta) = \frac{3}{4}\left(\sin k_f\zeta + \sin 3k_f\zeta \right) \quad .$$

The impulse coefficients for the RFQ fields are as follows:

$$k_x = \frac{\Delta s|q|\sin\phi}{m_0 c^2 \overline{\beta}^2 \overline{\gamma}} \left[-\frac{V}{r_0^2} C_1(\zeta) - \frac{k_f^2 AV}{4} C_2(\zeta) \right]$$

$$k_y = \frac{\Delta s|q|\sin\phi}{m_0 c^2 \overline{\beta}^2 \overline{\gamma}} \left[\frac{V}{r_0^2} C_1(\zeta) - \frac{k_f^2 AV}{4} C_2(\zeta) \right]$$

$$k_z = \frac{\Delta s\pi|q|k_f AVS(\zeta)\cos\phi}{m_0 c^2 \overline{\beta}^3 \overline{\gamma}\lambda}$$

6.12 RF Cavity (E_0, L, ϕ_0) NT=12

The main purpose of this element is for calculating the motion of a relatively low-velocity electron beam through a coupled-cavity cell. An example of such an element is the side-coupled cavity, often used for electron linacs. When a low-velocity electron enters such a cavity, its velocity can change significantly in one cell. In this case, approximations of constant velocity are not appropriate, and the motion must be obtained by integration through the electromagnetic field in the cavity.

For this purpose, the cell is divided into 18 equal-length segments, $\Delta s = L/18$. In each segment, the beam is given a drift-impulse-drift transformation. The impulse is calculated at the middle of the segment using the values of the E_z, E_r, and B_θ field components, the beam

energy, and the RF phase. The impulse from the space-charge force is also calculated and applied at the middle of each segment.

The electromagnetic-field components depend on the geometry of the cavity and on E_0, the average on-axis accelerating field. SUPERFISH[12] runs have been made for several types of cavities and at various cell lengths for each type. The results are scalable with frequency; therefore, each run at a particular cell length is associated with a value of $\beta = 2L/\lambda$, an implicit assumption for the cell length. For example, SUPERFISH runs were made for the side-coupled cavity geometry used by the racetrack microtron designed by Los Alamos for the National Bureau of Standards. Electric-field information was calculated for cavity lengths having values of β from 0.55 to 1.0 in steps of 0.05. For each value of β, the fields near the axis were Fourier-analyzed and the first 14 nonzero coefficients were calculated. A table of these coefficients versus β is stored in a TRACE 3-D subroutine, GENFC. Then, for any given cavity length and frequency, a value is determined for β based on $L = \beta\lambda/2$. The Fourier coefficients for this β are obtained by a linear interpolation in the table, and the field components are reconstructed from the Fourier coefficients and scaled by E_0. For details on calculating the electromagnetic-field components in a cavity, and on calculating the linear impulse coefficients, see Appendix G.

6.13 Tank (E_0T, L, ϕ_d, n_c) NT=13

A coupled-cavity tank consists of n_c identical cavities L/n_c long. The quantity E_0T is the constant *effective* accelerating field, and ϕ_d is the entrance and exit phase. Note that $\phi_d \neq \phi_s$ where ϕ_s is the average phase. Although most of the acceleration takes place in the central portion of each cell, one can think of the rate of energy change as being constant:

$$\frac{dW}{dz} = |q| E_0 T \cos\phi \quad .$$

In the tank element, each cavity is divided in two halves. In the first half of a cavity, the electromagnetic fields are usually radially focusing; and in the second half, they are usually radially defocusing. For a synchronous phase near zero, these two effects essentially cancel each other when ions are accelerated, but electrons can have a net inward motion. At each cavity in a tank, the beam is drifted to the middle of the first half of the cavity, given an impulse based on field quantities averaged over the first half of the cavity and on the space-charge forces, and then drifted to the center of the cavity. This procedure is repeated for the second

[12] K. Halbach and R. F. Holsinger, "SUPERFISH - A Computer Program for Evaluation of RF-Cavities with Cylindrical Symmetry," *Part. Accel.* **7**, 213-222 (1976).

half of the cavity and for all cavities in the tank. The details for calculating the impulse coefficients are given in Appendix H.

6.14 Wiggler (*L* , *B* , *g* , *l* , *s*) NT=14

This element simulates a wiggler and is comprised of a series of alternate bends and drifts. The overall length of the wiggler is given by the first parameter, *L* (in mm). The second parameter, *B*, denotes the strength of each of the bending magnets (in Gauss). The remaining parameters specify the geometry, including the total gap in the dipole bending magnets, *g* (mm), the length of the bending magnets, *l* (mm), and the distance between each bend, *s* (mm). The bending is done only in the horizontal plane, with the first or odd-numbered bends defined as positive (even-numbered bends in the series are negative). There must be an integer number of periods in the wiggler, one period equaling a sequence of bend-drift-bend-drift. Bend edge-angles are included at half the bend angle, assigning K_1 a value of 0.255 and K_2 the default value of 2.8.

6.15 Rotation & Translation (Θ , *plane* , d_1 , d_2) NT=15

This element allows the user to select a plane, (viz., *x*-*y*, *y*-*z*, *z*-*x*), specifying rotation about the axis normal to that plane (roll, pitch, yaw) and/or translation in that plane (note: translation is not available in the *z*-plane). The coordinates in the selected plane may be rotated through an angle Θ (deg) about the axis normal to that plane. Thus a rotated element (such as a bending magnet, quadrupole, doublet, or triplet) may be inserted into a transport system by preceding and following the element with the appropriate coordinate rotation. If no plane is entered, the program defaults on the *x*-*y* plane. A positive angle rotates the beam clockwise (looking at the *x*-*y* plane from the positive *z* direction), simulating a counterclockwise rotation of the elements that follow it. The rotation in the *x*-*y* plane is accomplished by the transfer matrix

$$\begin{bmatrix} C & 0 & S & 0 & 0 & 0 \\ 0 & C & 0 & S & 0 & 0 \\ -S & 0 & C & 0 & 0 & 0 \\ 0 & -S & 0 & C & 0 & 0 \\ 0 & 0 & 0 & 0 & 1 & 0 \\ 0 & 0 & 0 & 0 & 0 & 1 \end{bmatrix}$$

where C and S denote $\cos\Theta$ and $\sin\Theta$, respectively.

6.16 Repeat (*n*) NT=16

This element gives the user an easy way to duplicate any element defined in the transport system. The only parameter required is the sequence number of the element with which it is identical. For example, if there are several quadrupoles in the system that all have the same characteristics, only one needs to be specifically defined by a type code and parameter set; the rest can be included using the repeat element. When any parameter in the defined quadrupole is modified, all quadrupoles defined by the repeat element are likewise modified. The sequence number defining the repeat element must not be the sequence number of another repeat element.

6.17 User 1 (*l*) NT=17, User 2 (*l*) NT=18

These two elements give provision to the user to define special elements in the transport system, the length of which should be the first parameter. Code subroutines USER1 and USER2 may be modified appropriately to create the user-defined elements. To increase the number of parameters (up to a maximum of five), an adjustment must be made in the 17th and 18th positions of DATA NPAR in BLOCK DATA INIT1 of the code.

7.0 SPACE-CHARGE IMPULSES

Approximate expressions for the electric field components that are due to a uniformly charged ellipsoid, as given by Lapostolle[13] are as follows:

$$E_x = \frac{1}{4\pi\varepsilon_0}\frac{3I\lambda}{c\gamma^2}\frac{(1-f)}{r_x(r_x+r_y)r_z}x \quad ,$$

$$E_y = \frac{1}{4\pi\varepsilon_0}\frac{3I\lambda}{c\gamma^2}\frac{(1-f)}{r_y(r_x+r_y)r_z}y \quad ,$$

$$E_z = \frac{1}{4\pi\varepsilon_0}\frac{3I\lambda}{c}\frac{f}{r_x r_y r_z}z \quad ,$$

where r_x, r_y, and r_z are the semiaxes of the ellipsoid, I is the average electrical current (assuming that a bunch occurs in every period of the RF), λ is the free-space wavelength of the RF, c is the velocity of light, and ε_0 is the permittivity of free space. The form factor f is a function of $p \equiv \gamma r_z \Big/ \sqrt{r_x r_y}$. Values for f are given in Table III for specific values of p and $1/p$.

TABLE III: Space-Charge Form Factor

[13] P. M. Lapostolle, CERN report AR/Int. SG/65-15, Geneva, Switzerland (July 1965).

p	*f*	*1/p*	*f*
0.00	1.000	0.00	0
0.05	0.926	0.05	0.007
0.10	0.861	0.10	0.020
0.15	0.803	0.15	0.037
0.20	0.750	0.20	0.056
0.25	0.704	0.25	0.075
0.30	0.661	0.30	0.095
0.35	0.623	0.35	0.115
0.40	0.588	0.40	0.135
0.45	0.556	0.45	0.155
0.50	0.527	0.50	0.174
0.55	0.500	0.55	0.192
0.60	0.476	0.60	0.210
0.65	0.453	0.65	0.227
0.70	0.432	0.70	0.244
0.75	0.413	0.75	0.260
0.80	0.394	0.80	0.276
0.85	0.378	0.85	0.291
0.90	0.362	0.90	0.306
0.95	0.347	0.95	0.320
1.00	0.333	1.00	0.333

The change in the normalized momentum components caused by applying the space-charge force during the time interval required for the beam to move a distance Δs is

$$\Delta(\beta\gamma)_u = \frac{qE_u \Delta s}{m_0 c^2 \beta}$$

where *u* represents *x*, *y*, or *z*.

The above formulation is valid only for ellipsoids that are upright with respect to the local coordinate system. When the beam passes through a solenoid or a bending magnet, it is possible for the ellipsoid to become tilted with respect to the local coordinate system. In this case, the beam ellipsoid must first be transformed to a coordinate system in which it is upright before calculating and applying the space-charge impulses. The ellipsoid is then transformed back to the local coordinate system.

A tilted ellipsoid is indicated if the σ-matrix elements, σ_{13}, σ_{35}, or σ_{51}, are nonzero. If σ_{13} is nonzero, the ellipsoid is tilted in the *x*-*y* plane. The angle between the *x*-axis and the axis of the elliptical projection on the *x*-*y* plane is as follows:

$$\Theta = \frac{1}{2} tan^{-1} \frac{2\sigma_{13}}{\sigma_{33} - \sigma_{11}} \quad .$$

The ellipsoid can be brought upright with respect to the *x*-*y* plane by a rotation of $-\Theta$, accomplished by applying the following transfer matrix:

$$\begin{bmatrix} C & 0 & -S & 0 & 0 & 0 \\ 0 & C & 0 & -S & 0 & 0 \\ S & 0 & C & 0 & 0 & 0 \\ 0 & S & 0 & C & 0 & 0 \\ 0 & 0 & 0 & 0 & 1 & 0 \\ 0 & 0 & 0 & 0 & 0 & 1 \end{bmatrix}$$

where C and S denote $\cos\Theta$ and $\sin\Theta$. The rotated ellipsoid can be checked to see if it is upright with respect to the *y*-*z* plane. If not, it can be rotated by a similar transfer matrix. It can be rotated a third time, if necessary, to make it upright with respect to the *z*-*x* plane.

When the beam is in the upright position, the space-charge impulses can be calculated and applied, and the three rotations given in the reverse directions in the reverse order.

Before the initial rotations are made, the ellipsoid is expanded in the *z*-direction by applying a transfer matrix that is equal to the identity matrix, except that the 5,5 element is the relativistic parameter γ and the 6,6 element is $1/\gamma$. Also, a γ is removed from the denominator of the transverse impulses, and a γ is added to the denominator of the longitudinal impulse. After applying the inverse rotation, the ellipsoid is contracted by the inverse of the perturbed identity matrix discussed above.

8.0 USER INSTRUCTIONS

TRACE 3-D initially prompts for the name of an input file. If there is no datafile with which to begin, a carriage return provides a few "dummy" values, allowing the user to enter the program to build a datafile. If supplied with the name of an existing file, the file is read by a single READ statement, using the NAMELIST feature of FORTRAN. This feature is extremely useful because it allows one to enter a few or all of the parameters defined in the NAMELIST statement. After the file is read, identifying code information is displayed to the screen, and either the terminal is put into a graphics mode or a graphics window will appear with the cursor crosshairs. In this mode, TRACE 3-D waits for a single-character command to be issued from the keyboard. Following issuance of a command and the code's subsequent performance of the requested action, TRACE 3-D again displays the cursor crosshairs, indicating that it is once again in the wait-for-command mode. The commands recognized by TRACE 3-D are given in Table IV below, and are discussed in more detail in Section 10.0.

TABLE IV: Commands Recognized By TRACE 3-D

Character	Command	Description of Action
A	ADD	Add elements in beamline
B	BEAM	Print beams, and beams in holding arrays
C	CONVERT	Convert input/output beams to PARMILA units
D	DELETE	Delete elements from beamline
E	END	Exit program
F	PHASE	Calculate and print phase advance
G	GO / GRAPH	Graph background and trace beam profile
H	HELP	Display help package (input, commands, matching types)
I	INPUT	Enter new values
J	PROJECTIONS	Plot initial / final projections on *x-y*, *x-z*, *x-*$\Delta p/p$ planes
K	PERIODIC	Generate periodic system with RFQ or DTL cells
L	ELLIPSE	Find emittance ellipses from three profile measurements
M	MATCH	Perform matching as specified by MT parameter
N	MATCH	Perform matching (same as "M") with no iteration printout *
O	MISMATCH	Calculate and print mismatch factors
P	PRINT	Display datafile to screen
Q	QUERY	Display specific element information
R	R-MATRIX	Display R-matrix from latest run
S	SAVE	Save datafile
T	TRACE	Trace beam profile on existing graphics background
U	USER	Search / set match parameter ranges (MT=7, 8, 9)
V	VARIABLES	Display values of matching variables *
W	Φ-W	Display phase and energy information
X	EXCHANGE	Exchange beam values and beam holding arrays
Y	NOTE	Write note on graphic screen
Z	σ-MATRIX	Display modified sigma matrix
!	UNMATCH	Restore pre-match values
@	APERTURE	Open / close profile / aperture datafile
#	NEWFILE	Read in a new datafile
&	COMMENT	Display file comment
*	CENTROID	Display beam-centroid coordinates
?	MINI-HELP	Display element parameter information

* Useful on certain platforms

9.0 INPUT VARIABLES

The TRACE 3-D input variables are grouped into the following categories discussed in this section: transport system variables, beam characteristics, control parameters, matching parameters, graphics scales, print parameters, and other parameters. In describing each of the variables, their code-internal names will appear in capital letters. If the variable is a dimensioned array, the dimensions as they appear in a DIMENSION or COMMON statement are enclosed in parenthesis. Values for variables are entered in NAMELIST fashion where variables are set equal to a value, and multiple entries are separated by commas. For example, to enter the rest energy, ER, and kinetic energy, W, of the beam, one would access the Input Mode with the command "I" and type the following:

```
ER=938.2796,  W=100
```

9.1 Transport System [NT(NELMAX), A(5,NELMAX), FREQ, PQEXT, ICHROM]

The elements of a transport system are defined in sequential order by a "type code" in the NT array (types 1–18) and by the associated parameters (≤ 5) stored in the A array. The NT and A arrays were defined earlier in Section 4.0, Tables I and II. The maximum number of elements, NELMAX, is defined in the FORTRAN program by a PARAMETER statement. FREQ is the frequency of the RF in MHz; and even if no RF elements appear in the transport system, an entry for FREQ is necessary to define the length of the beam bunch expressed in degrees. The variable PQEXT defines the extension of the fringe field of permanent-magnet quadrupoles (PMQs). These fields extend from each edge of a PMQ a distance of PQEXT times the inner radius r_i of the magnetic material inside the PMQ. In such regions, transport calculations include the effects of PMQ fringe fields. The last variable, ICHROM, is a flag to specify that chromatic aberrations are to be taken into account (if nonzero) when the beam passes through a thin lens. Chromatic aberrations cause an effective emittance growth, so the σ-matrix is modified as described in Appendix I.

9.2 Beam Characteristics [ER, Q, W, XI, BEAMI(6), BEAMCI(6), EMITI(3), SIGI(6,6)]

The rest energy of the beam particles is specified by ER, and their kinetic energy by W (units in MeV); Q is the charge state (+1 for protons), and XI is the beam current in mA. The initial ellipse parameters are in the BEAMI array in the order α_x, β_x, α_y, β_y, α_ϕ, β_ϕ. These are the Courant-Snyder, or Twiss, parameters for the initial phase-space ellipses in the three phase planes. The alphas are dimensionless, β_x and β_y are in meters/rad (or mm/mrad), and β_ϕ is in deg/keV. These are the same units used for all beam arrays. BEAMCI(6) is for entering an

initial beam centroid offset. The initial emittances in the *x*-*x'*, *y*-*y'*, and $\Delta\phi$-ΔW phase planes are in the EMITI array. The units are in π·mm-mrad in the *x*-*x'* and *y*-*y'* phase-space planes, and in π·deg-keV in longitudinal phase-space plane. When space-charge forces are included (i.e., XI $\neq 0$), these emittances should be *five times the rms emittances*. SIGI is a 6x6 array containing the initial σ-matrix. The elements of the SIGI array are internal, but can be used as input quantities (see parameter IBS in Section 9.3).

9.3 Control Parameters [N1, N2, SMAX, PQSMAX, IBS, NP1, NP2, NEL1, NEL2]

N1 and N2 are the beginning and ending sequence numbers of the transport elements through which the beam is followed. When the beam is followed in the forward direction (normally the case), the beam starts at the upstream end of element N1 and is followed to the downstream end of element N2. If N1 > N2, the beam starts at the downstream end of element N1 and is followed upstream (in reverse) to the upstream end of element N2. A negative value in element N2 tells the program to follow the beam backward through element N1 only. SMAX is the maximum step size (in mm) for the dynamics calculations in most of the elements; however, near PMQs, the maximum step size is PQSMAX (mm), usually a smaller value than SMAX. The program's "dummy file" has default values of 5 mm for SMAX and 2.5 mm for PQSMAX. In some elements, the step size is set automatically. For example, each RFQ cell and coupled-cavity is divided into 18 segments, and each cavity in a tank is divided into two parts.

The flag, IBS, is used to indicate how the initial σ-matrix is generated. If IBS = 0 (the normal case), the elements of the initial σ-matrix are calculated from the BEAMI and EMITI arrays. If IBS = 1, the initial σ-matrix is assumed to be in the SIGI array.

NP1 and NP2 are sequence numbers of the first and last transport elements plotted on the beam-profile plot (defaults are 1 and NELMAX), while NEL1 and NEL2 are the element numbers where the beam phase-space ellipses are plotted (defaults are N1 and N2).

9.4 Matching Parameters [MT, NC, MP(2,6), MPE(6), MPP(6), MVC(3,6), CMV(6), BEAMF(6), DELTA, IJM(2,6), VAL(6), NIT, IPLANE(3)]

MT specifies the type of beam-matching or transport-fitting desired. Types 1–4 specify that matched beam-ellipse parameters are to be found for a periodic system. Types 5–14 (except MT = 13) indicate that values are to be found for specified element parameters, called matching variables, that cause the beam-ellipse parameters, *R*-matrix or modified σ-matrix elements to satisfy specified conditions at the end of element N2 (for MT = 13, BEAMI ellipse parameters are varied). Descriptions of the matching-type codes, MT, are given in Table V.

TABLE V: Types Of Matching In TRACE 3-D

Match Type (MT)	Desired Values at N2	How Specified	
1	Matched beam, X, Y planes	Enter Match Type Only (BEAMI is varied)	
2	Matched beam, Z plane		
3	Matched beam, X, Y, Z planes (upright)		
4	Matched beam, X, Y, Z planes		
		Desired Beam	**Vary Elements**
5	Fitting in X plane	BEAMF (1-2) = αx, βx	MPE(1)=element # MPP(1)=parameter #
6	Fitting in Y plane	BEAMF (1-2) = αy, βy	MPE(2)=element # MPP(2)=parameter #
7	Fitting in Z plane	BEAMF (1-2) = αz, βz	MPE(3)=element # MPP(3)=parameter #
8	Fitting in X, Y planes	BEAMF (1-4) = αx, βx, αy, βy	MPE(4)=element # MPP(4)=parameter #
9	Fitting in X, Y, Z planes	BEAMF (1-6) = αx, βx, αy, βy, αz, βz	MPE(5)=element # MPP(5)=parameter #
10	Fitting for R-matrix elements	IJM (2,6) = indices of R- or σ-Matrix elements VAL (6) = corresponding desired values of matrix elements	MPE(6)=element # MPP(6)=parameter # (MPP defaults on 1) No. of conditions, NC, No. of variables, NV, set automatically except MT=10, 11,14
11	Fitting for σ-matrix elements		
12	Fitting for round beam	---NA---	
13	Fitting in X, Y, Z planes	BEAMF (1-6) = αx, βx, αy, βy, αz, βz	---NA--- (BEAMI is varied)
14	Fitting for specified phase advances in specified phase planes	Enter IPLANE (1–3), VAL (1–3), and No. of phase planes in NC (≤3),	Declare elements to vary as in MT=5–12 above

NC is the number of conditions to be satisfied by the matching procedure and is automatically set by the program for matching types 1–9, 12–13. The user must specify a value for NC (≤6) for matching types 10–11, and a value for NC (≤3) for matching type 14. The MP array contains the parameter and element numbers of the variables for matching types 5–12 and 14. MP(1,*n*) contains the parameter number (1–5) and MP(2,*n*) contains the element number (1 to NELMAX) for the nth matching variable. Ideally, the number of variables, NV, should equal the number of conditions, NC. When either MP(1,*n*) or MP(2,*n*) is not within the legitimate range (NV < NC), a variable is not properly defined and is ignored. Matching is attempted even though NV < NC. The matching variables may be specified by entering the parameter and element numbers in the 2x6 MP array, or alternately (and usually more easily), by entering values in the one-dimensional arrays MPE(6) for element numbers and MPP(6) for

corresponding parameter numbers (whose default = 1 if no entry is made). For example, if we have four quadrupoles whose element numbers are 12, 16, 20, and 24, to specify these elements as matching variables whose first parameters, the quad strengths, will vary (usually the case), one may enter the following in the Input Mode:

```
MP=1,12,1,16,1,20,1,24
```

or alternately, achieving the same result, one may enter:

```
MPE=12,14,16,22
```

It is possible to "couple" one transport element parameter to each variable parameter. For example, two drifts may be coupled so that when one is increased the other is decreased by the same amount, keeping the total distance constant; or two drifts may be coupled so that they are both changed by the same amount to maintain symmetry. Quadrupole gradients may be coupled so that when one changes, the other changes by the same amount. The indices of the coupled parameters, and *k*, the type of coupling, are specified in the MVC array. MVC(1,*n*) and MVC(2,*n*) contain *i* and *j*, the parameter and element number, respectively, of the transport parameter A(*i*,*j*) that is coupled to the nth matching variable. MVC(3,*n*) contains *k*, either +1 or –1. If the coupled variables are drifts, $k = -1$ keeps the *sum* of the two drifts constant, and $k = +1$ changes both drifts by the same amount. The variables to be coupled to the matching variables may be specified by entering the parameter, element, and *k*-value numbers in the 3x6 MVC array, or alternatively (and again somewhat easier) by utilizing the one-dimensional "Couple Matching Variable" character array, CMV(6). For example, if we want to couple two additional quadrupoles, beamline elements 2 and 32, to the first and last matching variables given in the example above (elements 12 and 22), coupling the first one directly and the second one inversely, we would enter the following in the Input Mode:

```
MVC(1,1)=1,2,1,    MVC(1,4)=1,32,-1
```

or alternately, achieving the same result, one may enter the following into the Couple Matching Variable character array:

```
CMV(1)='A(1,2)',    CMV(4)='-A(1,32)'
```

The BEAMF array contains the values desired for some or all of the ellipse parameters α_x, β_x, α_y, β_y, α_ϕ, and β_ϕ at the end of element N2 for MT = 1–9. For MT = 1–4, the values in BEAMF are entered automatically (BEAMI values) by the program; for MT = 5–9 and MT = 13, the values in BEAMF are set by the user. For matching types 10 and 11, the IJM and VAL arrays are used. The indices for the *R*-matrix elements or the modified σ-matrix elements for MT = 10 or MT = 11 are in the IJM array, and the desired values for these

elements are in the VAL array. IJM (1,*n*) contains the *i*-index (row), IJM (2,*n*) contains the *j*-index (column), and VAL(*n*) contains the desired value for either R_{ij} or σ_{ij} for the nth condition, where $n \leq$ NC. For example, if we want a point-to-point focus with a magnification of –1 (transverse planes), we would want *R*-matrix elements with values as follows:

$$R_{12} = 0, \quad R_{34} = 0, \; R_{11} = -1, \; R_{33} = -1$$

To achieve this, we would enter the following in the Input Mode:

```
MT=10,IJM=1,2,3,4,1,1,3,3,VAL=0,0,-1,-1
```

A convergence factor is calculated each iteration in the matching procedure. For matching types 1–9 and 13, the convergence factor is the largest of the mismatch factors calculated for the ellipse parameters in the appropriate planes (for a definition of ellipse mismatch factors, see Appendix C). For matching types 10–12 and 14, the convergence factor is the largest difference between the values desired and the values obtained. If the specified value has a magnitude greater than one, a relative difference is used. DELTA, the convergence criterion, defaulted to 0.0001, can be changed by the user. When the largest of the mismatch factors is less than or equal to DELTA, the solution is assumed to be close enough, and the matching procedure is terminated. The procedure is also terminated if convergence has not been achieved after NIT iterations. NIT is defaulted to 10, but may be changed by the user.

Finally, for MT = 14, fitting for specified phase advances in specified planes, the user indicates which planes in IPLANE(1–3)—where 1 = *x*-*x*′ plane, 2 = *y*-*y*′ plane, and 3 = z-$\Delta p/p$ plane—and the respective desired phase advances are entered in VAL(1–3). A value for NC must be set by the user (equal to the number of planes), and a corresponding number of matching variables declared.

9.5 Graphics Scales [XM, XPM, DPM, DWM, YM, DPP, XMI, XMF, XPMI, XPMF, DPMI, DPMF, DWMI, DWMF, XC]

These quantities set the maximum values for the axes of the phase-space and profile plots. XM and XPM set maximum limits on the transverse phase-space plots in mm and mrad, respectively, and DPM (deg) and DWM (keV) set maximum limits of the longitudinal phase-space plots. YM (mm) sets the aperture (vertical axis) for the transverse profiles of the beam in the profile plot, while DPP (deg) sets the phase profile maximum on the same profile plot. It is possible to specify different scales for the initial and final phase-space plots (often desirable) by setting any of the remaining input parameters XMI, XMF, XPMI, XPMF, DPMI, DPMF, DWMI, and DWMF to the desired values. If no entry is made for these input parameters, the scales default to the same values for both initial and final phase-space plots.

The final parameter, XC, provides an additional scale on the same profile plot for a displaced beam centroid. If there is no offset of the beam centroid, this scale will not appear. If an offset is generated and no XC entry has been made, a default scale one-tenth the transverse beam-profile scale is used.

9.6 Print Parameters [NPRIN, IJPRIN(2,20), PE(20), PP(20)]

Up to 20 transport parameters can be written on the graphics display to provide information. NPRIN is the number of parameters to print, and the *i* and *j* indices of parameter A(*i*,*j*) are in IJPRIN(1,*n*) and IJPRIN(2,*n*) for the nth parameter. An alternate method to enter printout parameters can be done using the one-dimensional arrays PE for the desired printout element and PP for the corresponding printout element parameter (default = 1). When the PE array is used for input, NPRIN is set automatically.

9.7 Other Parameters [CMT(NELMAX), COMENT, NXTRA, EXTRA(10)]

The CMT variable provides eight characters for the identification or naming of elements in the datafile. Each element may use the eight-character comment CMT(*n*) which may be entered in the Input Mode surrounded by single quotes. A number of these eight-character comments are included in the example of a typical datafile as seen by a text editor in Figure 2 and in the example of the execution of the "P" command in Figures 7 and 11. The COMENT variable is a 60-character file comment that can also be seen in the figures just mentioned. It is possible to print the file comment to the graphics screen (depending on the graphics system used) with the "&" command.

Some additional storage space is reserved in the EXTRA array for extra parameters, and NXTRA of these parameters in the EXTRA array will be printed when executing the "P" command. The EXTRA array can provide a place for a user to store additional parameters needed for a user-defined element.

10.0 DESCRIPTION OF COMMANDS

Included here is a brief description of the commands recognized by TRACE 3-D as listed previously in Table IV, Section 8.0. Most commands appear obvious, but a little explanation with a few examples will be of benefit. Examples of what the user might enter are shown in italics.

10.1 "A" ADD Command

To add or insert one or more beamline elements between any two elements, issue the "A" command. This will provide the following prompt:

```
Add M1 elements before element M2
Enter M1,M2:
```

For example, to insert two new beamline elements between elements 5 and 6, enter 2,6 (a comma or a space is used to separate entries). The program will move all type codes in the NT array and all transport parameters in the A array, starting at element M2, to locations increased by M1; i.e., NT(6) moves to NT(8), A(1,6) becomes A(1,8), etc. The program automatically enters the Input Mode (providing the "ENTER INPUT" prompt), the same as if the user had issued the "I" command. The user should then enter the parameters for the new beamline elements, including the element type in the NT array, as in the following example:

```
Add M1 elements before element M2
Enter M1,M2: 2,6
ENTER INPUT:
NT(6)=1,3,A(1,6)=100,A(1,7)=3.5,50
```

In this example, the user inserted a drift (NT = 1) and a quadrupole (NT = 3) , the drift being element 6 and the quadrupole element 7. The user then entered the element parameters: 100 mm for the drift length, and a field strength of 3.5 T/m and a length of 50 mm for the quadrupole. To verify that input was entered correctly, the user may issue the "P" command to inspect the datafile (discussed below). If the "A" command is issued by mistake, the user may enter 0,0 for M1, M2 to exit the Add Mode.

10.2 "B" BEAM Command

Issuing the "B" command displays to the screen a number of beams, including BEAMI (initial beam), BEAMF (final beam desired for matching purposes), BEAMCI (initial beam centroid offsets), and BEAMC (beam centroid offsets), in addition to a listing of all stored beams in any of the 14 beam-holding arrays. A note will indicate how many beam-holding arrays remain available. The "X" command (described below) is used to exchange beams, i.e., to enter beams into or retrieve beams from storage arrays, saving or replacing BEAMI, BEAMO, and/or BEAMF arrays.

10.3 "C" CONVERT Command

Often used in conjunction with TRACE 3-D, the PARMILA code uses different units for both its input and output routines. The "C" command will convert TRACE 3-D BEAMI, BEAMO, EMITI, and EMITO arrays to PARMILA unnormalized input units and normalized output units. The command will display a page of output to the screen with this information.

10.4 "D" DELETE Command

To delete one or more beamline elements, issue the "D" command. This will provide the following prompt:

```
Delete M1 elements--start with M2
Enter M1,M2:
```

To delete elements 13–15, for example, the user enters 3,13. This removes elements 13, 14, and 15. The program will move all type codes in the NT array and all transport parameters in the A array, starting at element M2+M1, to locations decreased by M1 (decreased in sequence number or a move upstream by M1 elements). To verify that the element deletion was done correctly, the user may issue the "P" command. If the "D" command is issued by mistake, the user may enter 0,0 for M1, M2 to exit the Delete Mode.

10.5 "E" END Command

This is the most obvious command. The "E" command terminates the program.

10.6 "F" PHASE Command

If the beam is followed through one period of a periodic structure, the phase advances and the matched-ellipse parameters can be calculated from the *R*-matrix (arc cos of one-half the trace of the *R*-matrix) by issuing the "F" command. The phase advance in degrees and the Twiss (α and β) beam-ellipse parameters for each of the three phase-space planes are calculated and displayed as follows (also seen in Example A):

```
          TWISS PARAMETERS
     SIG       ALPHABETA
X    37.0773   0.0000.2199
Y    37.0773   0.0000.1090
Z    31.1751   0.0000.3277
```

assuming the 2x2 *R*-matrix for each plane can be written in the following form[14]:

$$R = \begin{bmatrix} \cos\mu + \alpha\sin\mu & \beta\sin\mu \\ -\gamma\sin\mu & \cos\mu - \alpha\sin\mu \end{bmatrix}$$

where $\gamma = \left(1+\alpha^2\right)/\beta$. Note that when space-charge forces are involved, a calculation to find a matched beam by issuing the "M" command, using a match type MT = 1–4, should be

[14] The phase advance is denoted here by μ and in the program by σ (sigma).

performed to ensure that space-charge forces contributing to the *R*-matrix correspond to the matched beam.

10.7 "G" GO / GRAPH Command

The dynamics calculations are performed by issuing the "G" command. The graphics background is drawn, and the initial phase-space ellipses plotted—the horizontal (solid) and vertical (dashed) ellipses on the same plot, and the longitudinal (dashed) ellipse on a separate plot. If the beam is going forward, the initial ellipses (defined by arrays BEAMI and EMITI) will be drawn on the left-hand side; if the beam traverses the elements in reverse, the initial ellipses will be drawn on the right-hand side. As the beam is followed through the beamline elements, the beam envelopes are plotted in the beam-profile box—the horizontal and longitudinal beam profiles in the upper half (solid and dotted lines, respectively), and the vertical profile (dashed line) in the lower half. When the beam reaches its destination, the final ellipses (defined by arrays BEAMO and EMITO) are drawn. Information defining the beam current, initial and final emittances and energies, as well as values for any matching or printout parameters, are displayed in the space between the initial and final ellipses. Examples of the typical graphic output can be seen in Example A, Figures 3–6, 8–10.

10.8 "H" HELP Command

A complete help package is accessible on-line when using TRACE 3-D by issuing the "H" command. There are five pages of help, accessed in sequence, each time using the "H" command, containing information organized as follows:

Help Page 1:	Input Parameters for Beam, Transport, Controls, Matching, and Graphics
Help Page 2:	Command Descriptions and Transport System Element Types
Help Page 3:	Description of Element Parameters (Elements 1–9)
Help Page 4:	Description of Element Parameters (Elements 10–18)
Help Page 5:	Descriptions for Matching Types

Printouts of these on-line help pages are included in Appendix N.

10.9 "I" INPUT Command

The "Input Mode," already mentioned several times, is entered into with the "I" command. After issuing the "I" command, the following prompt is displayed:

```
ENTER INPUT:
```

Any of the variables previous defined in Section 9.0 and any number of values for these variables may be entered or changed in the Input Mode. Values for variables are entered in NAMELIST fashion where variables are set equal to a value, and multiple entries are separated by spaces or by commas. For example, to enter initial emittances and beam current, and to change two parameters in the seventh beamline element, the user enters the following:

```
ENTER INPUT:
EMITI=25,25,700,  XI=75,  A(1,7)=.1222,-90
```

Note that sequential values in an array (such as the EMITI and A arrays) can be entered without retyping the array name. Any entry error detected by the NAMELIST READ statement will cause the entire line to be rejected, displaying an error message but remaining in the Input Mode to allow the user to try again. A carriage return exits the Input Mode. Each input line is limited to 100 characters.

10.10 "J" PROJECTION Command

The "J" command lets the user look at the real-space projections of the beam (x-y and x-z) as well as a projection in x-$\Delta p/p$ space. The projections are displayed on a graphics page with the upstream end of the system shown on the left, and the downstream end on the right. It is often useful to see the beam sizes in real space and note any obvious correlations. If the ellipses are tilted, there are correlations. After going through a bending magnet, one will see a correlation between x and $\Delta p/p$ (if the bend is in the x-direction).

10.11 "K" PERIODIC Command

The "K" command will generate a periodic system consisting of either RFQ or DTL cells, prompting the user for the needed input such as cell parameters, lattice configuration, type of quadrupole, etc. This command may or may not be implemented in some versions of the code.

10.12 "L" ELLIPSE Command

The "L" command provides a mechanism for determining the ellipse parameters and emittances in the two transverse phase planes from measurements of beam sizes at three locations. This feature can be useful when tuning a beamline. If beam profile measurements are available at three locations along a transport system, and all transport parameters are known, but not the beam parameters, this option provides a way to estimate the emittances. When the "L" command is issued, the following prompts appear as input is entered:

```
DETERMINE EMITTANCE FROM THREE
(3) WIDTH MEASUREMENTS:
```

```
ENTER LOC (1-3):
9,11,25
ENTER XHW (1-3):
10.1,8.5,9.3
ENTER YHW (1-3):
8.25,13.0,4.7
```

The user specifies the locations of the measurements with three element numbers in the array LOC. The measurements are assumed at the downstream end of the specified elements; however, if LOC(1) = 0, the first measurement is assumed to be at the beginning of the first element. Following entry of the locations, the user is prompted to enter three horizontal beam half-widths in array XHW, followed by three vertical beam half-widths in array YHW. Before issuing this command, the graphics display should be on the screen, because measured widths will be plotted and beam profiles drawn as the program goes through five iterations in an attempt to solve the problem. The details of the procedure are described in Appendix J. If a realistic solution is found, the calculated emittances in the transverse planes are displayed along with the transverse beam profiles between the three locations. If the solutions to the equations result in a negative value for the emittance in either plane, the error message "UNREALISTIC SOLUTION--CHECK DATA" is displayed. Subsequent issue of the "L" command allows new entries of beam-profile measurement data assuming the same locations.

10.13 "M" MATCH Command

To find the matched-ellipse parameters in a periodic system, or to find the values of specific transport parameters that properly fit the beam or give the desired values for specified elements of the *R*- or σ-matrices, the "M" command is used. Before issuing the "M" command, the user should verify that the proper match type, MT, is set, and that the proper number of matching variables are declared as required. The user will find most of the necessary information in Table V, "Types of Matching in TRACE 3-D."

Depending on the matching type, specified by MT, a solution is sought for a set of NC nonlinear, simultaneous equations. The method used is that of *regula falsi,* an iterative procedure that, starting with an initial "guess" for the solution, usually converges to a solution in a reasonable number of trials. (If the value of any variable is zero, that value will not be changed.) With the "M" command, the convergence or mismatch factor and the values of the variables are printed on the screen for each iteration. If a solution has not been found after NIT iterations, the variables will be set to their 'best" values, those that give the minimum convergence or mismatch factor. To try again for NIT iterations, starting with the best results as the initial guess, issue the "M" command again. If no progress is made toward a solution after several tries, the user should consider one or more of the following possibilities:

- Something may be wrong with the data; check by issuing the "P" command.

- The solution is too far from the initial guess to be found by this technique. Using the "I" command, put in different parameters and try again.
- No solution exists. In this case, the transport system may have to be modified, for example, by adding more elements.
- If the number of variables, NV, is less than the number of conditions, NC, an exact solution probably does not exist.

10.14 "N" MATCH Command

Issuing the "N" command will produce exactly the same results as issuing the "M" command, except for the iteration printout. The "N" command will display both the initial and final mismatch or convergence factors for a set of matching calculations, but not the intermediate values of any matching variables used in the iterative process. This is especially useful on those systems where both text and graphics share the same screen (e.g., on a Tektronix 4014 emulator). The "V" command (described below) may be used to obtain the matching variable values following a matching procedure that was issued with the "N" command. Again, for some systems, this allows the user to perform several matching cycles, trace the resulting profiles on the original graph (using the "T" command, also described below), and maintain a record of the calculations, all on one graphic output without any overprinting (see Figure 13, Example B).

10.15 "O" MISMATCH Command

The "O" command calculates and displays the mismatch factors, provided there is a match type, and provided the desired values have been entered into the BEAMF array (depending on the match type, MT, this may be done automatically). The mismatch factors between the ellipses defined by the beam parameters in the BEAMO (output beam) array and those in the BEAMF (desired beam) array are calculated and displayed. The definition of the mismatch factor and an explanation of how the mismatch factor is calculated can be found in Appendix C.

10.16 "P" PRINT Command

The "P" command does not "print" but rather "displays" most of the datafile to a fresh screen at the terminal. It is good practice to routinely verify the accuracy or correctness of the datafile. When a dynamics run gives unrealistic results, or when a matching procedure is getting nowhere, something may be wrong with the data. A datafile display issued by the "P" command is shown in Figure 11, Example B, and Figure 14, Example C.

Again, useful on some systems, if the printed output reaches the bottom of the graphics display, printing will stop and the cursor crosshairs will be displayed; however, TRACE 3-D remains in the Print Mode, and printing may be resumed after repositioning the cursor crosshairs and entering a "C" (for continue). Any other command will cause the program to exit from the Print Mode and to wait for another command.

10.17 "Q" QUERY Command

The "Q" command allows the user to ask for a display of the parameter values of any specified beamline element. This avoids the inconvenience of having to display the entire datafile (using the "P" command) to find the value of one or more parameters of a specific beamline element. This is especially useful for making modifications in parameter values. After issuing the "Q" command, the user enters a beamline element number, and the parameter values are displayed as follows:

```
ENTER ELEMENT NO.:
24
ELEMENT#  24, NT= 10  (GAP ):
PAR(1)=     0.05850
PAR(2)=   -90.00000
PAR(3)=     1.00000
PAR(4)=     0.00000
PAR(5)=     1.00000
```

10.18 "R" *R*-MATRIX Command

Whenever the beam is followed between N1 and N2, using either the "G" or "T" commands, the transfer matrix for this distance is stored in the *R*-matrix or RM array. Issuing the "R" command will display this 6x6 transfer matrix stored in the RM array. Detailed information on the *R*-matrix for each of the elements is provided in Section 6.0.

10.19 "S" SAVE Command

To save a datafile, issue the "S" command. The code will prompt the user for a filename; if none is entered, the same datafile will be overwritten. If a new filename is entered and there is no existing file by that name, the datafile will be saved with the new name; however, if a file with that same name already exists, the user will be asked whether or not to overwrite the file. The file is saved in ASCII format, and can be viewed or modified by an editor. The ASCII datafile for Example A, displayed by a text editor, can be seen in Figure 2.

10.20 "T" TRACE Command

One of TRACE 3-D's most useful features is its capability to immediately display the beam profiles through a transport system, providing the user with instant feedback. This is fully realized when issuing the "T" or "Trace" command. The "T" command traces the phase-space ellipses and beam profiles on an existing graphics page (provided earlier by the issuance of the "G" command), and provides immediate and easy comparisons between beams using different beam parameters or transport systems using different values for various element parameters. For example, it is possible to observe the effect of a single parameter modification on the beam output parameters or to see differences in beam profiles following a matching procedure. The "T" command is useful for exploring the effects of changes in beamline components or element parameters so long as the beamline length does not change.

10.21 "U" USER Command

This command, originally reserved for a user-defined option, currently provides a special "grid-search" procedure for matching types 7, 8, and 9. The "U" command allows the user to set ranges and step sizes for the matching variables (of matching types 7, 8, and 9) to maintain the possible matching-variable values within the specified ranges during the matching process. When the "U" command is issued, the user is prompted to enter the ranges and step size for each of the declared matching variables as follows:

```
Enter RANGE VALUES for
matching elements:
A(1,11)=   -13.1671.    ENTER
(MIN,MAX,STEP):
-14,-12,0.2
A(1,26)=     9.0031.    ENTER
(MIN,MAX,STEP):
8,10,0.2
A(1,28)=   -10.0188.    ENTER
(MIN,MAX,STEP):
-10.5,-9.5,0.2
A(1,30)=     3.4713.    ENTER
(MIN,MAX,STEP):
2.5,3.5,0.1
```

The matching procedure commences following the entries (without iteration printout), and when terminated, the mismatch factor and new variable values are displayed for the best solution found under the restraints of the "grid-search" conditions. The user should note that the matching procedure will require a much longer time to complete, depending on the number of variables, the magnitude of the ranges, and the sizes of the steps entered (essentially, number of iterations equals the product of each of the ranges divided by their corresponding step sizes). The above example requires 5,000 iterations.

10.22 "V" VARIABLES Command

The "V" command, useful on some systems, displays the current value of the matching variables. It is usually used in conjunction with the "N" (matching) command which bypasses the matching-variable iteration printout during the matching procedure. If using the "N" command, the "V" command will provide an update on the values of the matching variables following a matching procedure.

10.23 "W" W-Φ Command

Information about the longitudinal plane of the output beam is displayed by issuing the "W" command. The information includes the phase and energy of the beam center, the phase and energy half-widths, the length (mm) of the longitudinal semiaxis, the $\Delta p/p$ half-width (mrad), and the longitudinal emittance in the z-$\Delta p/p$ plane (π·mm-mrad). On systems using the Tektronics emulators, this information is displayed at the bottom of the graphics screen.

10.24 "X" EXCHANGE Command

The beam-ellipse parameters of the BEAMI, BEAMF, and/or BEAMO arrays may be stored in (and retrieved from) any one of 14 storage locations at any time. This beam-exchange feature is useful for following the beam over short segments of a transport system, for reversing the beam, or for storing multiple beams for use in the same transport. For example, one may store the output beam BEAMO at some intermediate element *n*, retrieve it from storage to place in BEAMI, follow the beam further downstream to N2 or upstream (in reverse) to N1. Another example is when matching variables constitute only a small section of a long beamline and it is useful to run the beam up to element *n* near the matching variables section, store BEAMO, retrieve it and place it in BEAMI, and start the dynamics calculations from element *n* to eliminate unnecessary repetitive calculations over the long beamline during the iterative matching procedure. A third example is that often the user will have a number of different initial conditions or starting beams which are convenient to hold in storage and retrieve as desired.

When the "X" command is issued, a prompt appears which allows the user to either store or retrieve a beam. When the purpose of issuing the command is to store a beam (either BEAMI, BEAMF, or BEAMO), the user will enter a letter (either "I", "F", or "O") followed by the number of a storage or hold position (1–14) as follows:

```
Enter beam ("I","F","O") and a
hold position (1-14), or vice
versa, for exchange:
I,8
Enter Comment for Stored Beam:
Measured beam 5/3/97 run#55
```

In this example, the six ellipse parameters in BEAMI are now stored in the eighth location of array HOLD(6,14). It is also possible to store a 27-character comment to identify a particular stored beam. In addition, the initial σ-matrix, contained in the array SIGI, is correspondingly stored in the SIGS(6,6,14) array, the initial kinetic energy W in the WS(14) array, the beam centroid BEAMC in BEAMCS(6,14) array, and the beam current XI in the XXI(14) array. Stored beams remain in the datafile when the datafile is saved. The ellipse parameters of stored beams can be displayed by issuing the "B" command described earlier.

When the purpose of issuing the "X" command is to retrieve a beam from any one of the 14 hold locations, the user reverses the process, entering the hold location first (1–14) followed by the letter of the beam (either "I" or "F") into which the stored beam is to be placed.

10.25 "Y" NOTATION Command

On some systems, it is useful to be able to print information on the graphic output. With the "Y" command, the user may position the crosshairs at any point on the graphic screen and type in desired information. Such capability can be used to identify profiles, beams, etc., or simply to make notations about the data or calculations on the graphic output itself. An example of using the "Y" command may be seen in Figure 13.

10.26 "Z" SIGMA Command

The "Z" command displays the modified σ-matrix in the same format as that used in the code TRANSPORT, namely:

x_{max}					
x'_{max}	r_{12}				
y_{max}	r_{13}	r_{23}			
y'_{max}	r_{14}	r_{24}	r_{34}		
z_{max}	r_{15}	r_{25}	r_{35}	r_{45}	
$\Delta p/p_{max}$	r_{16}	r_{26}	r_{36}	r_{46}	r_{56}

The maximum extent of the beam ellipsoid in the ith dimensions is given by $\sqrt{\sigma_{ii}}$. The correlations between the various coordinates are defined by

$$r_{ij} = \sigma_{ij} \Big/ \sqrt{\sigma_{ii}\sigma_{jj}} \quad .$$

Because σ is a symmetric matrix, only half of the r_{ij}'s need be printed.

10.27 "!" UNMATCH Command

The "!" or "unmatch" command allows a user to restore the matching variable values that existed immediately before a matching calculation was implemented, issued by either the "M" or "N" command. This avoids the necessity of having to re-enter pre-match values when unrealistic solutions are found by the fitting algorithm. After issuing the "!" command, the message "PREMATCH VALUES RESTORED" is displayed.

10.28 "@" APERTURE Command

The "@" aperture command acts as a toggle switch to either open or close a file that receives the transverse beam-profile data (radial *x*- and *y*-profiles) every time a "G" or a "T" command is issued. These data are the same data used to draw the beam profiles (which are $\sqrt{5}$ -times the rms values) on the graphic output. Within each element (as the beam is followed), the maximum extent of the beam is calculated in the two transverse planes by adding to the centroids the transverse profiles multiplied by a user-supplied "aperture factor." Given these maximum extents, TRACE 3-D calculates the minimum radius required for a beampipe to transport the beam without scraping. At the point where the minimum radius is largest, TRACE 3-D outputs the transverse profiles and the corresponding centroids to the aperture file (the first four columns of data). The fifth and sixth data columns in the aperture file contain the maximum extents (the transverse profiles multiplied by the aperture factor plus the centroid offsets), and the last column is the circular beampipe radius (square root of the sum of the squares of the maximum extents) required to transport the beam without scraping. The example below shows the dialogue when first issuing the "@" command, entering an aperture factor of 3.13 to apply to the TRACE 3-D beam ($\sqrt{5}$ -times the rms values) to yield maximum-extent values for a 7-σ beam:

```
Enter aperture
multiplication factor:
3.13
Enter Filename
for Aperture File:
n2k0.aper
Opened n2k0.aper
```

When open, the file continues to receive data as dynamics calculations are performed by issuing "G" or "T" commands. After each run, the minimum required circular beampipe radius is displayed to the screen. On subsequent issuance of the "@" aperture command, the user may enter either a new aperture factor for another set of dynamics calculations or a "0" to close the file.

```
Enter New Aperture Factor
or "0" to close file:
```

The aperture datafile also provides the maximum values of each column of data along with beam information and other identifying data. The top and bottom portions of an aperture datafile on a dynamics calculation with a slight beam-centroid offset is shown in Figure 1.

```
FILENAME: n2k0.aper                                                26-MAR-97
FILE COMMENT:  Transport for N2 Luggage Detection System
TRACE-3D PROFILES/APERTURE DATA (Aperture Multiplication Factor=3.13000)
(all units = mm)
Values at Point of Maximum Beam Extent:
```

TRACE Element No.		Radial Profile X	Radial Profile Y	Center X	Center Y	Factor* Profile +Center X	Factor* Profile +Center Y	Circular Beampipe radius R
4	Drft	0.51	1.92	0.05	0.03	1.65	6.05	6.27
5	Quad	0.89	2.24	0.06	0.02	2.83	7.04	7.59
6	Drft	3.73	2.87	0.11	0.00	11.77	9.00	14.82
⋮	⋮	⋮	⋮	⋮	⋮	⋮	⋮	⋮
29	Drft	4.31	7.12	0.18	-0.01	13.67	22.30	26.16
30	Quad	5.07	5.86	0.24	0.00	16.11	18.34	24.41
31	Drft	5.32	5.27	0.28	0.00	16.92	16.49	23.62
MAX VALUES		7.98	12.76	0.28	0.03	25.19	40.06	41.30

```
VALUES ON ABOVE RUN:  I= 25.0mA   W(in)= 1.7500  W(out)= 1.7500MeV
     EMITi= 7.100  7.100  290.00,   EMITo=  9.508  7.103  377.60
```

Figure 1. Example aperture datafile produced by TRACE 3-D using the "@" aperture command.

10.29 "#" NEWFILE Command

The "#" newfile command allows the user to read in a new datafile without terminating the program. All values in the main common blocks are cleared and overwritten.

10.30 "&" COMMENT Command

On some systems, it is useful to display the file comment on the graphics page. Issuance of the "&" command will display the file comment.

10.31 "*" CENTROID Command

The "*" command will display the beam centroid coordinates for BEAMO. The beam centroid is also displayed with other beams when issuing the "B" command.

10.32 "?" MINI-HELP Command

The "?" mini-help command will display element parameter information for specified element or NT value. This information is quite useful, for example, when inserting beamline elements into the transport system where parameter and parameter order information is essential. Issuance of the "?" command prompts the user for an element type, displaying the appropriate part of the on-line help package. A request for information on a bend element, for example, displays the following information:

```
Enter Elem Type 1–18 for HELP:
8
NT=8 -- BEND
A(1,n):  Alpha, Bend Angle [deg]
A(2,n):  Rho, Bend Radius [mm]
A(3,n):  n, Field Grad index
A(4,n):  Vert Flag (0=horiz)
```

11.0 EXAMPLES

11.1 Matching Between a 400-MHz RFQ and DTL (Example A)

Example A, "Matching Between a 400-MHz RFQ and DTL," is the example mentioned in the Introduction. Figure 2 shows the ASCII input file for this example to be read in by the code as was described in Section 8.0. The input file defines a 2-MeV proton beam with a transverse emittance of 25 π·mm-mrad and a longitudinal emittance of 700 π·deg-keV. The transport system consists of the final two cells of a 400-MHz RFQ and the first two cells of a 400-MHz DTL, separated by a 100-mm drift space. This drift space will later be replaced by drifts, quadrupoles, and an RF gap for transverse and longitudinal matching.

The beam current of interest is 75 mA, but matching will be done first for zero-current. If the design of the two accelerating structures include similar focusing strengths per unit length, a match found for zero current should be acceptable for any current.[15] Multi-current matches are preferred, particularly when permanent-magnet quadrupoles are used (as they are in this example).

The first step is to determine the matched ellipse parameters at the exit of the RFQ, first for zero current, and then for 75 mA. For this purpose, the two RFQ cells must be one period in a focusing system. Values for V/r_0^2 and AV are 5.5 kV/mm^2 and 57 kV, respectively.

---

15 R. S. Mills, K. R. Crandall, and J. A. Farrell, "Designing Self-Matching Linacs," Proc. 1984 Linac Conf., Gesellschaft fiir Schwerionenforschung, May 7-111, 1984, Darmstadt report GSI-84-11, 112 (September 1984).

```
$DATA
ER=   938.28000, Q= 1., W=      2.00000, XI=      0.000,
EMITI =      25.000000,      25.000000,     700.000000,
BEAMI =      -1.36488,       0.14124,       1.51252,       0.16683,       0.03672,       0.33845,
BEAMF =      -1.36488,       0.14124,       1.51252,       0.16683,       0.03672,       0.33845,
BEAMCI=       0.00000,       0.00000,       0.00000,       0.00000,       0.00000,       0.00000,
FREQ=   400.000, PQEXT=  2.50, ICHROM= 0, IBS= 0, XC=   0.0000,
XM=  10.0000, XPM=  50.0000, YM=   5.00, DPM=  30.00, DWM=  100.00, DPP=  30.00,
XMI=  10.0000, XPMI=  50.0000, XMF=  10.0000, XPMF=  50.0000,
DPMI=  30.0000, DPMF=  30.0000, DWMI= 100.0000, DWMF= 100.0000,
N1=  1, N2=  2, SMAX=  5.0, PQSMAX=  2.0, NEL1=  1,  NEL2=  2,  NP1=  1,  NP2=  15,
MT=  4,NC= 6,IPLANE=0,0,0,MP=0,  0 , 0,  0 , 0,  0 , 0,  0 , 0,  0 , 0,  0 ,
MVC=0,  0,0 , 0,  0,0 , 0,  0,0 , 0,  0,0 , 0,  0,0 , 0,  0,0 ,
VAL=      0.0000000,      0.0000000,      0.0000000,      0.0000000,      0.0000000,      0.0000000,
CMT(  1)='RFQ CELL', NT(  1)= 11, A(1,  1)= 5.5000000    , 57.000000    , 24.430000    ,-30.000000    ,0.000000,
CMT(  2)='RFQ CELL', NT(  2)= 11, A(1,  2)=-5.5000000    , 57.000000    , 24.430000    ,-180.00000    ,0.000000,
CMT(  3)='       ', NT(  3)=  1, A(1,  3)= 100.00000    ,
CMT(  4)='PMQ    ', NT(  4)=  4, A(1,  4)= 160.00000    , 12.700000    , 6.0000000    , 20.000000    ,
CMT(  5)='PMQ    ', NT(  5)=  4, A(1,  5)= 160.00000    , 12.700000    , 6.0000000    , 20.000000    ,
CMT(  6)='       ', NT(  6)=  1, A(1,  6)= 11.730000    ,
CMT(  7)='RF GAP  ', NT(  7)= 10, A(1,  7)=0.81900000E-01,-35.000000     ,0.000000,0.000000,0.000000,
CMT(  8)='       ', NT(  8)=  1, A(1,  8)= 11.730000    ,
CMT(  9)='PMQ    ', NT(  9)=  4, A(1,  9)=-160.00000    , 12.700000    , 6.0000000    , 20.000000    ,
CMT( 10)='PMQ    ', NT( 10)=  4, A(1, 10)=-160.00000    , 12.700000    , 6.0000000    , 20.000000    ,
CMT( 11)='       ', NT( 11)=  1, A(1, 11)= 11.730000    ,
CMT( 12)='RF GAP  ', NT( 12)= 10, A(1, 12)=0.81900000E-01,-35.000000     ,0.000000,0.000000,0.000000,
CMT( 13)='       ', NT( 13)=  1, A(1, 13)= 11.730000    ,
CMT( 14)='PMQ    ', NT( 14)=  4, A(1, 14)= 160.00000    , 12.700000    , 6.0000000    , 20.000000    ,
CMT( 15)='PMQ    ', NT( 15)=  4, A(1, 15)= 160.00000    , 12.700000    , 6.0000000    , 20.000000    ,
WS(1)=    2.00000,    2.00000,    2.00000,    2.00000,    2.00000,    0.00000,    0.00000,
WS(8)=    0.00000,    0.00000,    0.00000,    0.00000,    0.00000,    0.00000,    0.00000,
SIGI(1,1)= 3.5310     , 34.122      ,0.00000E+00,0.00000E+00,0.00000E+00,0.00000E+00,0.00000E+00,
SIGI(1,2)= 34.122     , 506.74      ,0.00000E+00,0.00000E+00,0.00000E+00,0.00000E+00,0.00000E+00,
SIGI(1,3)=0.00000E+00,0.00000E+00, 4.1707      ,-37.813      ,0.00000E+00,0.00000E+00,0.00000E+00,
SIGI(1,4)=0.00000E+00,0.00000E+00,-37.813      , 492.67      ,0.00000E+00,0.00000E+00,0.00000E+00,
SIGI(1,5)=0.00000E+00,0.00000E+00,0.00000E+00,0.00000E+00, 4.3637      ,0.87304      ,
SIGI(1,6)=0.00000E+00,0.00000E+00,0.00000E+00,0.00000E+00,0.87304      , 129.72      ,
COMENT='EXAMPLE "A" IN THE TRACE-3D MANUAL                '
$END
```

Figure 2. ASCII input file for Example A as seen by a text editor.

Assuming that the horizontal vanes are nearer to the longitudinal axis at the beginning of the first cell, V/r_0^2 is +5.5 for the first cell and –5.5 for the second cell. The length of each cell is 24.43 mm, which is $\beta\lambda/2$ for 2-MeV protons at 400 MHz. A synchronous phase of –30° is assumed, and the fifth parameter of both cells is set to zero to avoid energy changes.

The input file is already set to do matching through the two RFQ cells for zero current. That is, XI = 0, N1 = 1, N2 = 2, and MT = 4. When the "M" command is issued, the program finds the input ellipse parameters that equal the output ellipse parameters in all three phase planes. It is important to remember that none of the alphas or betas should be zero when the matching is begun, because zero values will not be changed.

After the matching procedure, one can see the input and output beam ellipses and the profiles through the RFQ cells by issuing the "G" command. The graphics display is shown in Figure 3. The results of issuing the "F" and "W" commands are also shown in Figure 3. The "F" command determines the phase advances and the matched-ellipse parameters calculated from the transfer matrix. The "W" command gives information on the longitudinal properties of the beam, the output phase and energy, the half-widths of the phase and energy spreads, the half-widths in *z*- and $\Delta p/p$, and the emittance in *z*- $\Delta p/p$ phase space.

The zero-current ellipse parameters will be saved in the first of the holding arrays by issuing the "X" command and entering I, 1. The match for 75 mA is found by getting into the Input Mode (issuing the "I" command), changing the current XI to 75, and then issuing the "M" or "N" command. If the matching process does not converge after the first step of iterations, repeat the "M" or "N" command one or more times. The matched solution for 75 mA can be compared to the matched solution for zero current by issuing the "T" command, and new phase-advance information can be displayed again with the "F" command. A complete record of these transactions can be seen on the left-hand side of the graphics page in Figure 4. This solution (matched BEAMI for 75 mA) is saved in the second holding position by again issuing the "X" command and entering I, 2.

The next step is to find the ellipse parameters that are matched to the input of the DTL, the first two cells of which are represented by a sequence of permanent-magnet quadrupoles, drifts, and RF-gaps. The transverse focusing period of interest begins and ends in the middle of the first and third quadrupoles, respectively. The other halves of the first and third quadrupoles must be included in the transport because they affect the surrounding magnetic fields. The PMQ gradients are 160 T/m, and their lengths, 25.4 mm. The inner and outer radii of the quadrupoles are 6 mm and 20 mm, and since PQEXT = 2.5 in the datafile, the fringe fields will extend to 2.5x6 mm. The effective gap voltage, E_0TL, in each cell is 0.0819 MV. The length of each cell is 48.86 mm, equal to $\beta\lambda$ for 2-MeV protons at 400 MHz. To make the two cells identical, no energy gain is allowed. The synchronous phase is –35°.

To find the matched-ellipse parameters for zero current, we first issued the "I" command to get into the Input Mode and set XI = 0, N1 = 5, N2 = 14, and MT = 3 (upright ellipses in the center of quadrupoles). Once again, we issued the match command. When the solution was found, we issued the "G", "F", and "W" commands. The results are shown in Figure 5. Note that the zero-current traverse phase advances in the two structures are the same per unit length, 18.4°/$\beta\lambda$ (RFQ cell length=$\beta\lambda$/2, DTL cell length=$\beta\lambda$). The zero-current longitudinal phase advances are nearly the same, 15.2°/$\beta\lambda$ for the RFQ and 15.6°/$\beta\lambda$ for the DTL. Once again we saved the zero-current solution in the third holding position using the "X" command, changed the current to 75 mA, repeated the matching procedure, executed the "T" and "F" commands and saved the solution in the fourth holding position. We also saved the datafile as EXAMPLEA2. These transactions can be seen in Figure 6.

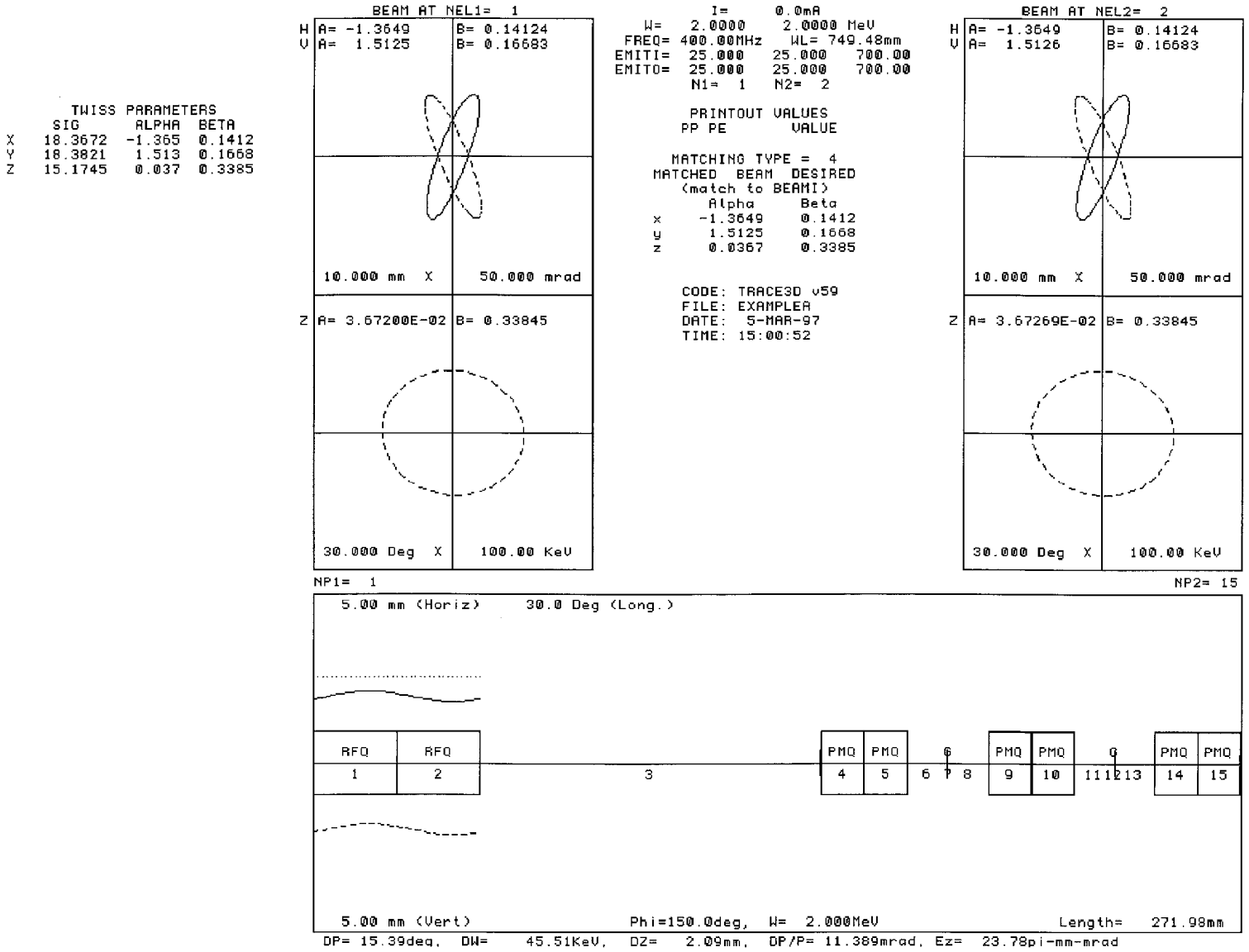

Figure 3. Graphical display showing the matched RFQ beam for zero current, with display of the Twiss parameters, and longitudinal parameters (Example A).

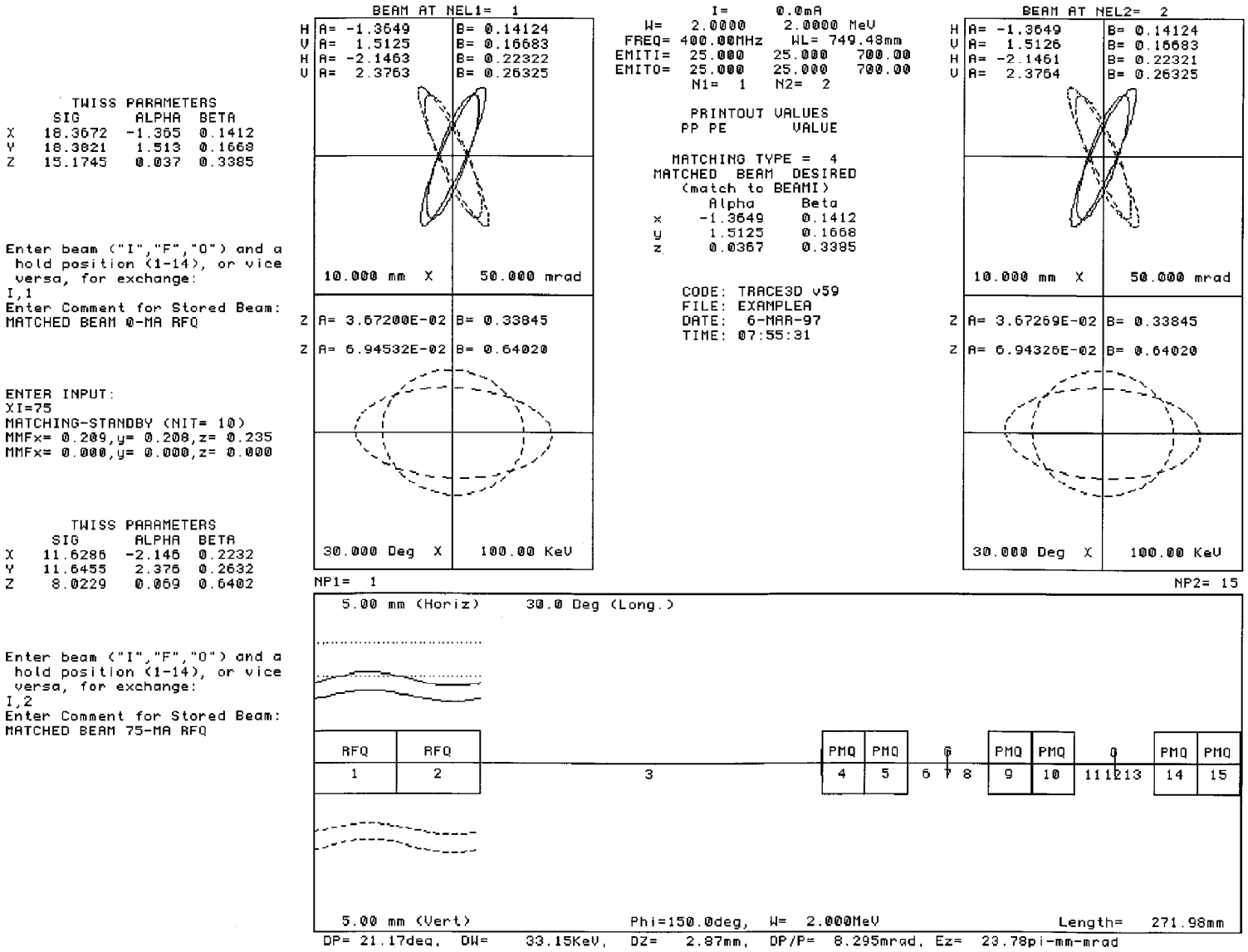

Figure 4. Matched RFQ beam for both zero current and 75 mA, showing input, matching, and beam-exchange transactions performed in Example A.

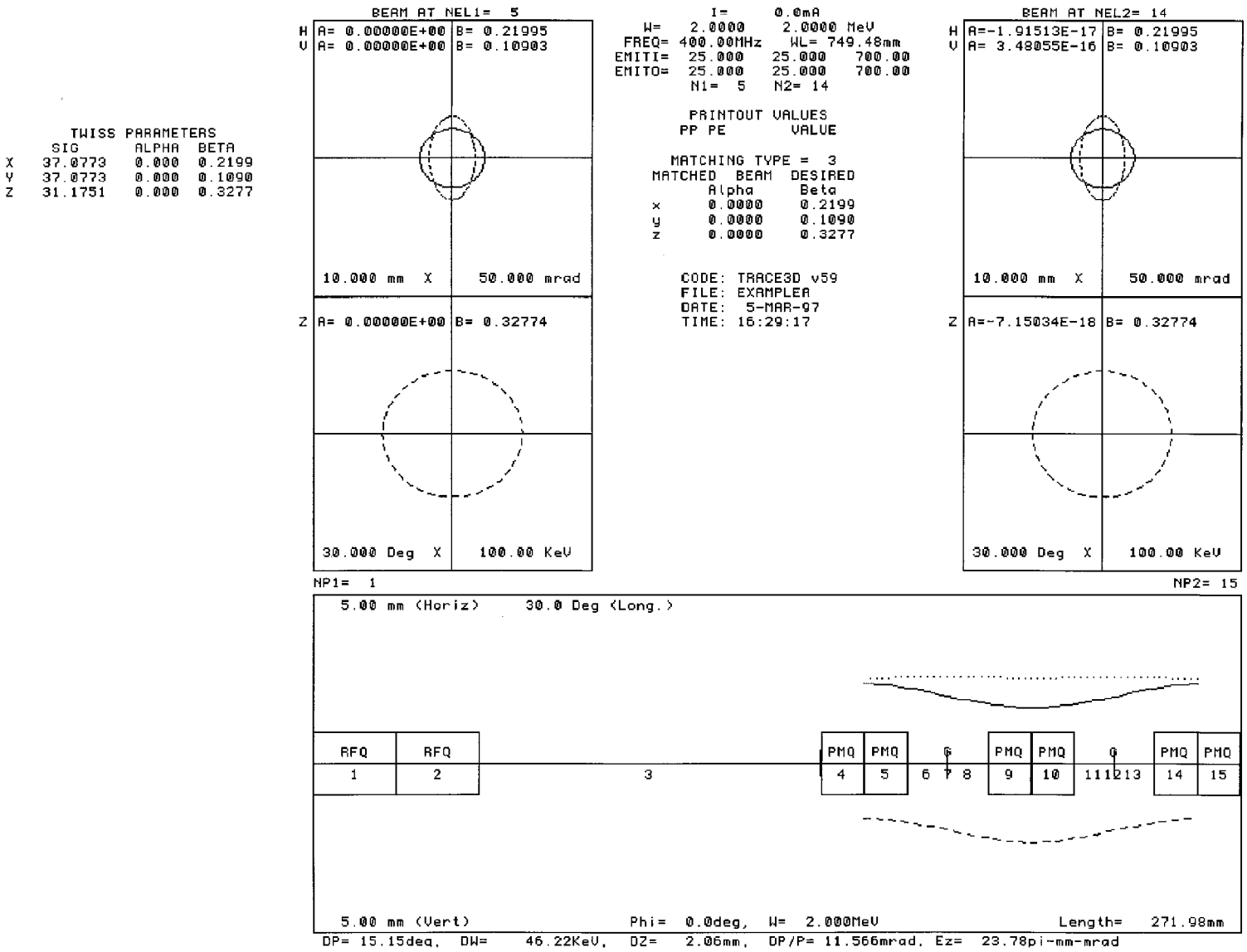

Figure 5. Graphical display showing the matched DTL beam for zero current, with display of the Twiss parameters, and longitudinal parameters (Example A).

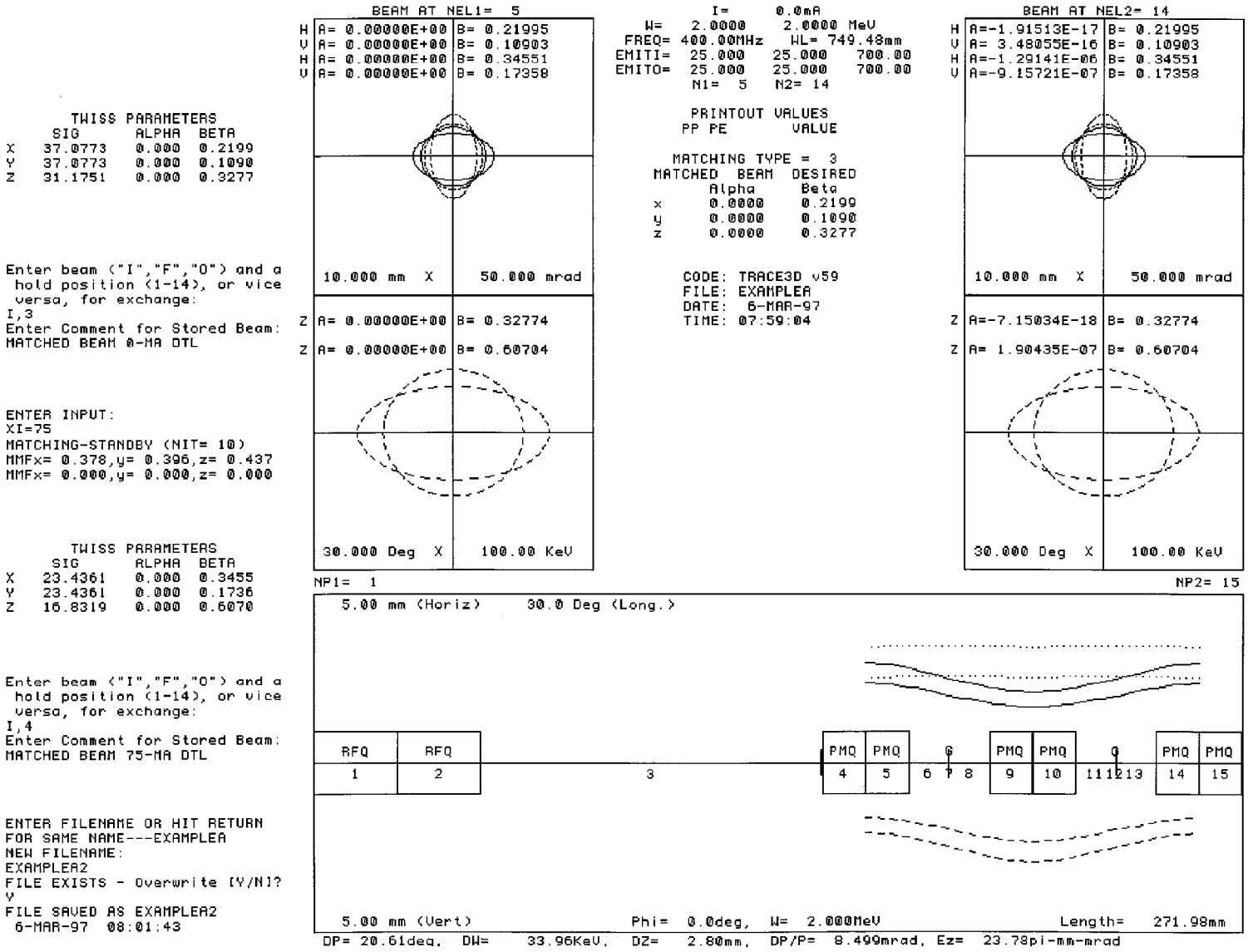

Figure 6. Matched DTL beams for both zero current and 75 mA, showing input, matching, and beam-exchange transactions performed in Example A.

Next, we put in a matching section between the RFQ and the DTL. We inserted the new elements after issuing the "A" command. Figure 7 shows the procedure, with a series of input commands. Both the type-array, NT, and the element-array, A, were updated for the eight new elements. The results of the "P" command to display the datafile, and the "B" command to display the beam storage arrays from the earlier beam exchanges can also be seen in Figure 7.

The matching section was tested by following the beam from the RFQ to the beginning of the DTL and comparing the beam parameters with those of the matched beam at that position. Two beam exchanges were made. First, we retrieved the zero-current matched RFQ beam stored in holding position 1 and placed it in BEAMI by entering 1, I following issuance of the "X" command. Next, the zero-current matched DTL beam stored in holding position 3 was retrieved and placed in BEAMF. This was done by issuing the "X" command a second time and entering 3, F. In the Input Mode ("I" command), the current XI was set to zero, and N1 and N2 set to 1 and 12, respectively. The "G" command was issued, followed by the "O" command to display the mismatch factors and to compare the output beam to the desired beam parameters that were entered in BEAMF. This can be seen in Figure 8.

The procedure was repeated for the 75-mA beams. BEAMI and BEAMF were updated from holding positions 2 and 4, and the current changed to 75 mA. The "T" command was issued followed by the "O" command, overlaying the 75-mA profiles and phase-space ellipses, and displaying the mismatch factors. This can be seen in Figure 9.

The mismatch factors between the 75-mA matched RFQ beam (placed in BEAMI and followed to the middle of the first DTL quad) and the 75-mA matched DTL beam (placed in BEAMF) are all less than 0.2, but not quite acceptable; therefore, we went through a matching procedure to see if they could be improved. We used matching type 9 (which expects six matching variables) even though we only declared four matching variables. (If fewer variables are declared, matching will still be attempted but an exact solution will not be found.) Only four values will be varied in our example, viz., the gradients for elements 5 and 9, the E_0TL value of the RF gap element 7, and the length of drift element 3. These were set by entering MT = 9, and MPE = 5,9,7,3 in the Input Mode. We also activated the print element option on the graphics display for seven other elements by entering PE = 1,2,3,4,6,8,10. These transactions can also be seen in Figure 9.

We continued to initiate the matching procedure (using the "N" command) until there was no further decrease in the mismatch factors. A "V" command was then issued to display the final value of the matching variables followed by the "T" command to display the final beam profiles and phase-space ellipses. The final results can be seen in Figure 10. Because of the entries for the matching and printout elements, the values of these parameters are displayed on

the graphics page. With all mismatch factors below 0.05, a reasonably good solution was obtained.

```
Add M1 elements before element M2
ENTER M1,M2:
8,4
ENTER INPUT:
NT(4)=1,4,1,10,1,4,1,1
ENTER INPUT:
A(1,4)=11.73,A(1,5)=160,25.4,6,20,A(1,6)=11.73
ENTER INPUT:
A(1,7)=.1222,-90,A(1,8)=11.73,A(1,9)=-160,25.4,6,20,
ENTER INPUT:
A(1,10)=11.73,A(1,11)=11.73,A(1,3)=3.7
```

```
BEAMI: x=     0.0000     0.3455
       y=     0.0000     0.1736
       z=     0.0000     0.6070
BEAMF: x=     0.0000     0.3455
       y=     0.0000     0.1736
       z=     0.0000     0.6070
BEAMCI:x=     0.0000     0.0000
       y=     0.0000     0.0000
       z=     0.0000     0.0000
BEAMC: x=     0.0000     0.0000
       y=     0.0000     0.0000
       z=     0.0000     0.0000
HOLD1: MATCHED BEAM 0-MA RFQ
HOLD1: x=    -1.3649     0.1412
       y=     1.5125     0.1668
       z=     0.0367     0.3385
HOLD2: MATCHED BEAM 75-MA RFQ
HOLD2: x=    -2.1463     0.2232
       y=     2.3763     0.2632
       z=     0.0695     0.6402
HOLD3: MATCHED BEAM 0-MA DTL
HOLD3: x=     0.0000     0.2199
       y=     0.0000     0.1090
       z=     0.0000     0.3277
HOLD4: MATCHED BEAM 75-MA DTL
HOLD4: x=     0.0000     0.3455
       y=     0.0000     0.1736
       z=     0.0000     0.6070
10 HOLD AREAS AVAILABLE
```

```
UNITS: mm, mrad, T/m, mA, MV/m          FILENAME: EXAMPLEA2
ER=  938.28000   Q= 1.   W=    2.00000   XI=   75.000
EMITI=     25.0000     25.0000     700.0000
BEAMI =     0.0000      0.3455      0.0000      0.1736      0.0000      0.6070
BEAMCI=     0.0000      0.0000      0.0000      0.0000      0.0000      0.0000
BEAMC =     0.0000      0.0000      0.0000      0.0000      0.0000      0.0000
BEAMF =     0.0000      0.3455      0.0000      0.1736      0.0000      0.6070
FREQ=  400.000,  PQEXT=  2.50, ICHROM= 0, IBS= 0 XC=  0.00
XM= 10.0,  XPM= 50.0000,  YM=  5.0,  DPM= 30.,  DWM=  100.,  DPP=  30.
N1=  5,  N2= 14,   SMAX=  5.0,  PQSMAX=  2.0
NEL1 =   5,  NEL2 =  14,  NP1 =   1,  NP2 =  23
MT=  3   NC=  3   LOC=   0   0   0

                n  NT(n)   A(1,n)     A(2,n)     A(3,n)     A(4,n)     A(5,n)
RFQ CELL        1    11     5.5000    57.0000    24.4300   -30.0000    0.0000
RFQ CELL        2    11    -5.5000    57.0000    24.4300  -180.0000    0.0000
                3     1     3.7000
                4     1    11.7300
                5     4   160.0000    25.4000     6.0000    20.0000
                6     1    11.7300
                7    10     0.1222   -90.0000     0.0000     0.0000    0.0000
                8     1    11.7300
                9     4  -160.0000    25.4000     6.0000    20.0000
               10     1    11.7300
               11     1    11.7300
PMQ            12     4   160.0000    12.7000     6.0000    20.0000
PMQ            13     4   160.0000    12.7000     6.0000    20.0000
               14     1    11.7300
RF GAP         15    10     0.0819   -35.0000     0.0000     0.0000    0.0000
               16     1    11.7300
PMQ            17     4  -160.0000    12.7000     6.0000    20.0000
PMQ            18     4  -160.0000    12.7000     6.0000    20.0000
               19     1    11.7300
RF GAP         20    10     0.0819   -35.0000     0.0000     0.0000    0.0000
               21     1    11.7300
PMQ            22     4   160.0000    12.7000     6.0000    20.0000
PMQ            23     4   160.0000    12.7000     6.0000    20.0000

        EXAMPLE "A" IN THE TRACE-3D MANUAL
```

Figure 7. Procedure for adding eight transport elements before element 4, a display of the datafile after the elements have been added, as well as the beams and beam-holding arrays (Example A).

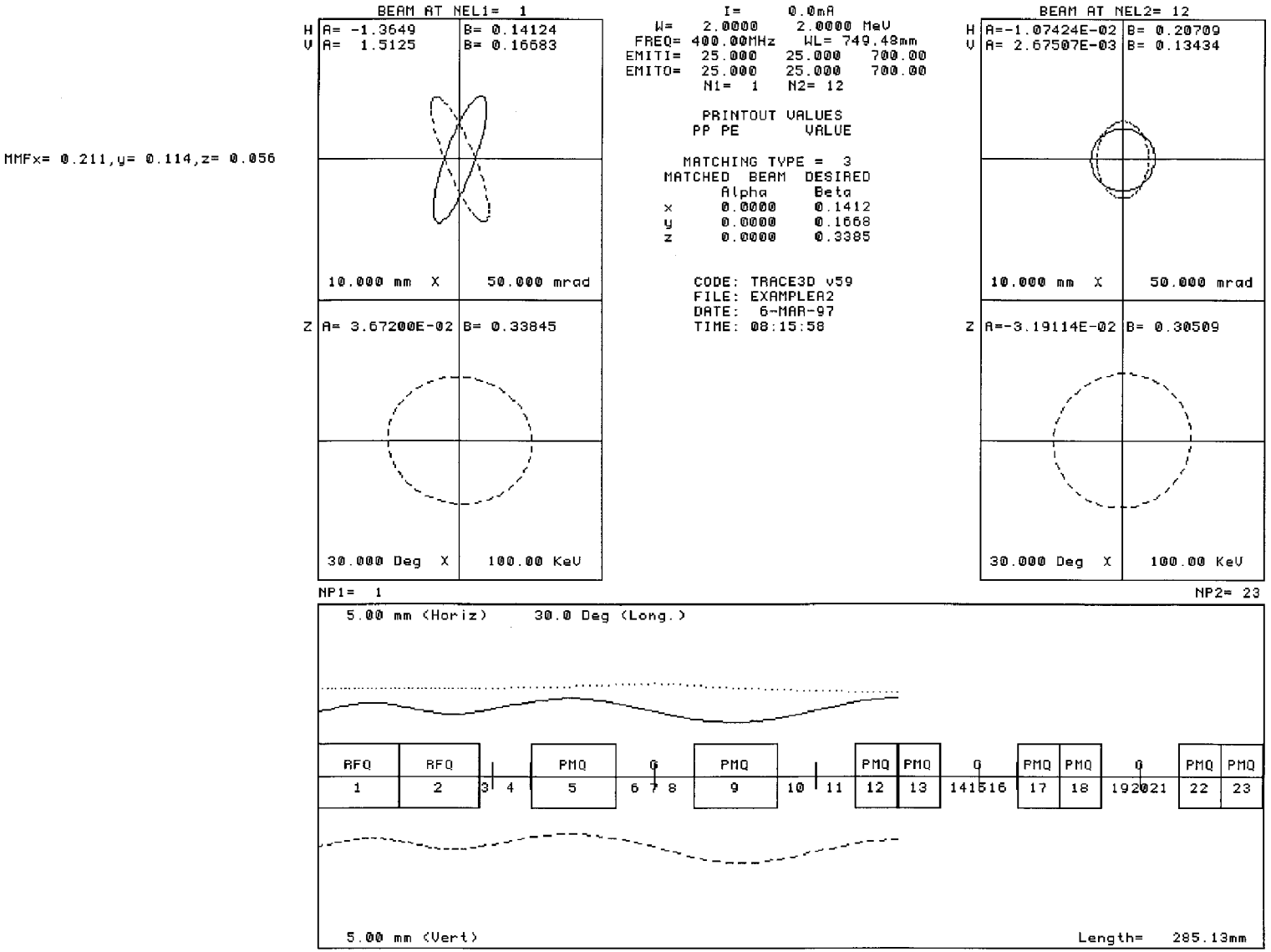

Figure 8. Matched zero-current RFQ beam followed to input of DTL (Example A).

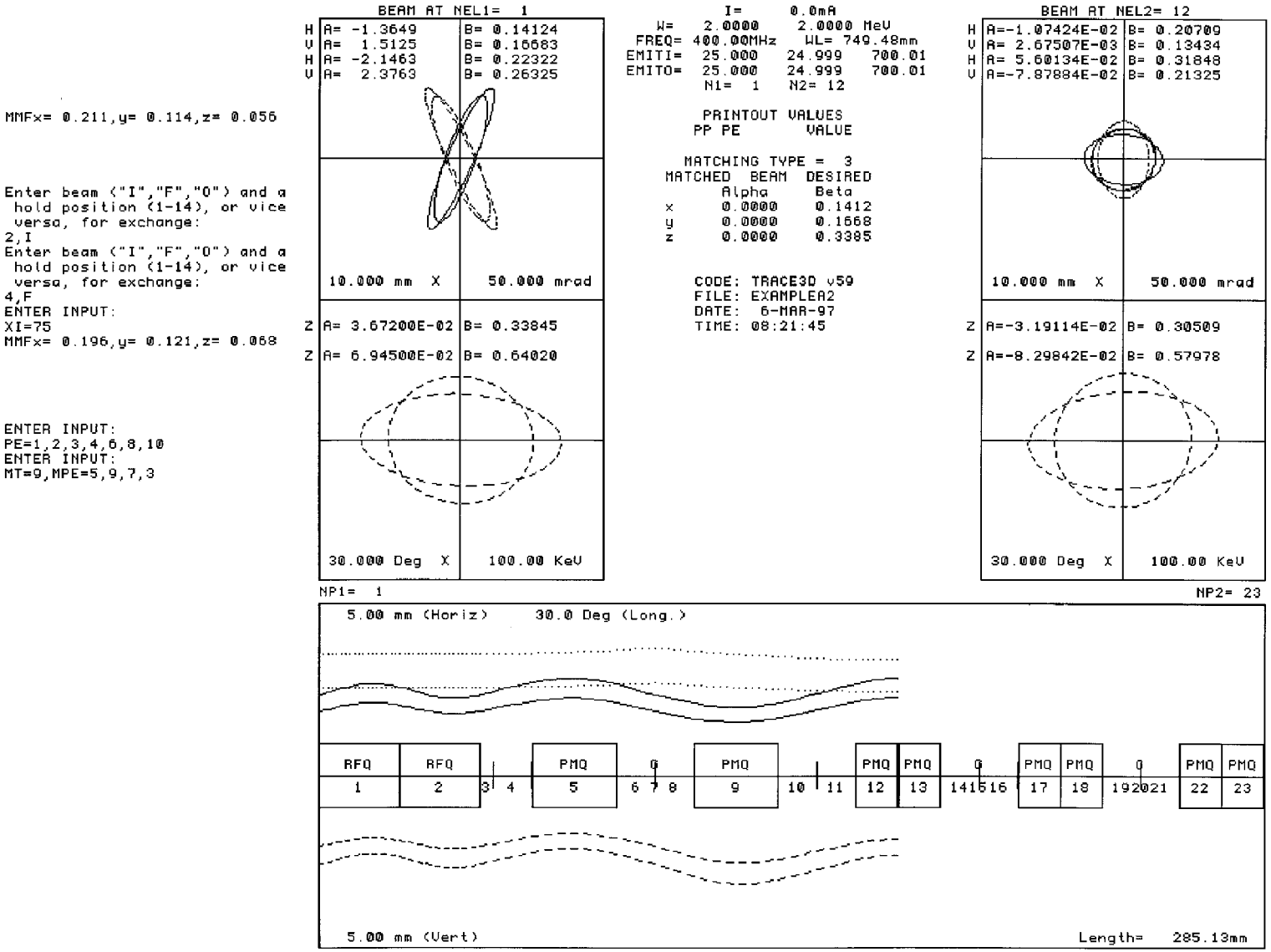

Figure 9. Matched 75-mA RFQ beam overlayed on matched zero-current RFQ beam followed to input of DTL (Example A).

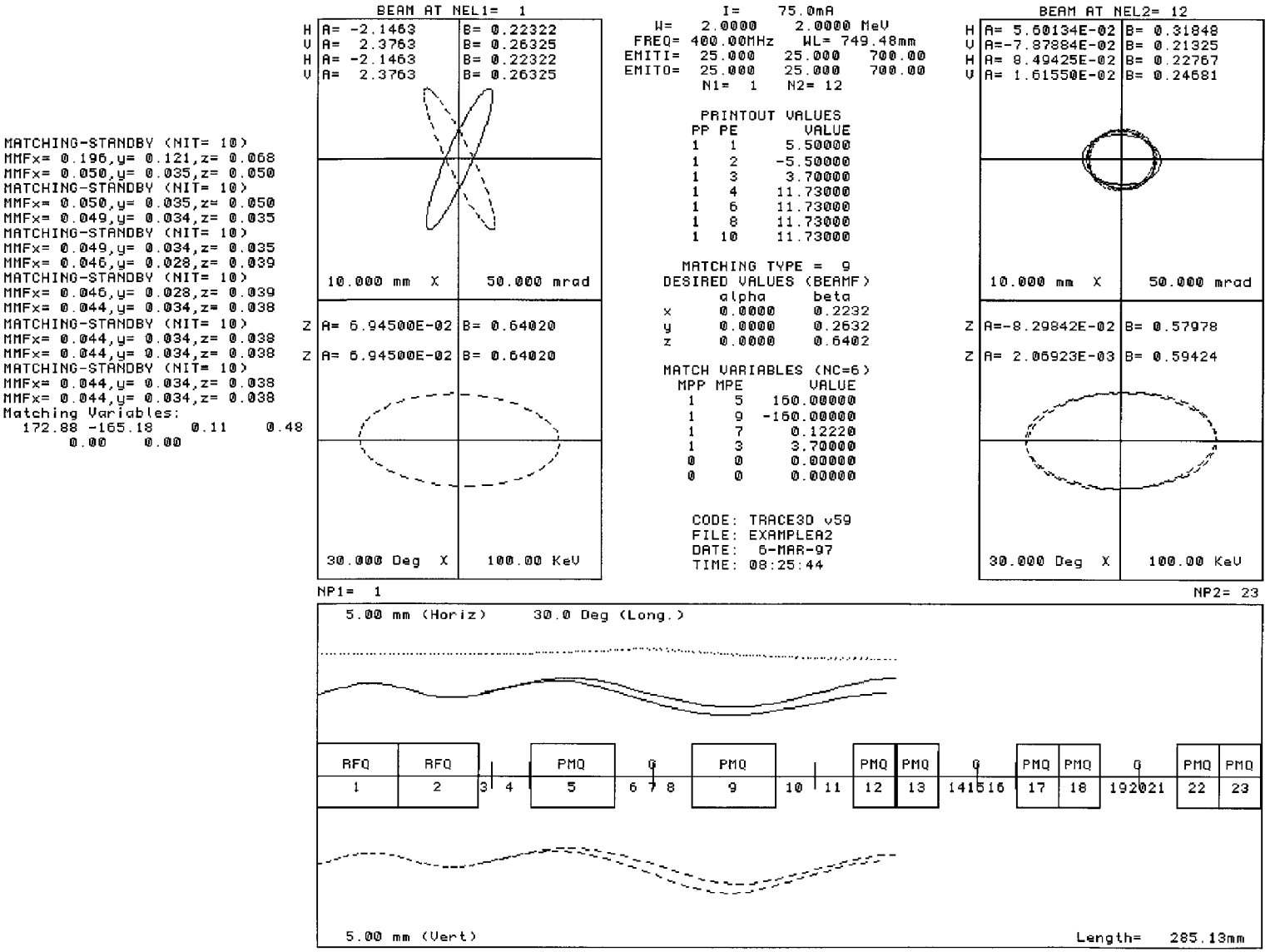

Figure 10. Matched 75-mA RFQ beam followed to input of DTL both before and after the matching procedure (Example A).

11.2 Matching Between an 80-MHz RFQ and DTL (Example B)

A different approach to matching between an RFQ and DTL must be used when the periodicity of the quadrupoles is not maintained between the accelerating structures or when the two structures have different focusing strengths. Traverse matching will be accomplished by using the first four quadrupoles of the DTL as matching variables (longitudinal matching will be ignored). It is not expected that the solution will be appropriate for other currents or emittances.

In this example, the frequency is 80 MHz, the energy is 2 MeV, and the 100-mA deuteron beam has a transverse emittance of 60 π·mm-mrad and a longitudinal emittance of 100 π·keV-deg. The initial step (not shown) was to find the matched beam for the final two cells of the RFQ and store the beam as we did in the first example.

Next (also not shown), we simulated two cells of a periodic DTL with no energy gain, using electromagnetic quadrupoles, drifts, and RF gaps. Instead of selecting the conditions at the beginning of the DTL, we select those at the end of cell 4 and match into a periodic structure at that point. The energy is 2.556 MeV, $\beta\lambda$ is 196.7 mm, E_0TL is 0.1815 MV, and the 96-mm quadrupoles have a gradient of 26.2 T/m. The beam energy W will need to increase to 2.556, and correspondingly, the unnormalized transverse emittances will be reduced. A matched beam for these two cells was determined and stored as before.

The two RFQ cells, a drift, and the first four cells of the DTL were made into a transport system as shown in Figures 11 and 12. Notice that the initial energy is 2 MeV and that each RF gap element has the fourth parameter set for an energy gain. Each cell has been given the correct total length, but the RF gap is not positioned off-center as it more accurately could be. BEAMI has the correct values for a matched RFQ beam, BEAMF has the values of the matched beam at the end of cell 4 (element 20) and will be used to calculate mismatch factors. The drift space between the RFQ and DTL is about one $\beta\lambda$, a distance long enough to allow separation of the structures, but short enough to prevent excessive debunching of the beam. The file was prepared for matching by declaring the matching variables (MPE= 4, 8, 12, 16) and setting MT = 8. Before matching, the input beam was followed through all the elements and the mismatch factors printed as seen in Figure 12.

The matching procedure was initiated with the "N" command until convergence was obtained, and the results displayed using the "T" and "O" commands (see Figure 13). The new quadrupole values were displayed using the "V" command following each matching sequence. The transverse solution is exact. Notice the increase in energy and the apparent decrease in transverse emittances. There is, of course, no change in *normalized* emittance; the values displayed by TRACE 3-D are *unnormalized.*

```
UNITS: mm, mrad, T/m, mA, MV/m          FILENAME: EXAMPLEB
ER= 1875.60000   Q= 1.    W=    2.00000   XI=  100.000
EMITI=     60.0000     60.0000   1000.0000
BEAMI =     3.1140     0.7536    -2.6202     0.5789     0.1210     0.5687
BEAMCI=     0.0000     0.0000     0.0000     0.0000     0.0000     0.0000
BEAMC =     0.0000     0.0000     0.0000     0.0000     0.0000     0.0000
BEAMF =     0.0000     0.4154     0.0000     1.3289     0.0000     0.3570
FREQ=   80.000,  PQEXT=  2.50, ICHROM= 0, IBS= 0 XC=  0.00
XM= 14.0,  XPM= 60.0000,  YM= 20.0,  DPM= 30.,  DWM=  100.,  DPP=  30.
N1=  1,  N2= 20,   SMAX=  5.0,  PQSMAX=  2.0
NEL1 =   1,  NEL2 =  20,  NP1 =   1,  NP2 =  20
NPRIN= 6 IJPRIN(I,J)= 1  1 1  2 1  6 1 10 1 14 1 18 0  0 0  0 0  0 0  0 0  0
MT=  8   NC=  4   LOC=   0   0   0

     MP(1,N)  MP(2,N)   VALUE        MVC      VALUE
        1         4     -26.20
        1         8      26.20
        1        12     -26.20
        1        16      26.20

           n  NT(n)   A(1,n)     A(2,n)     A(3,n)     A(4,n)     A(5,n)
RFQ        1   11    -0.7100   110.4000    86.4400   -28.7000     0.0000
RFQ        2   11     0.7100   110.4000    86.4400  -180.0000     0.0000
           3    1   173.0000
Quad #1    4    3   -26.2000    96.0000     0.0000     0.0000     0.0000
           5    1    39.7500
RF Gap     6   10     0.1815   -40.0000     0.0000     1.0000     0.0000
           7    1    39.7500
Quad #2    8    3    26.2000    96.0000     0.0000     0.0000     0.0000
           9    1    42.7400
RF Gap    10   10     0.1815   -40.0000     0.0000     1.0000     0.0000
          11    1    42.7400
Quad #3   12    3   -26.2000    96.0000     0.0000     0.0000     0.0000
          13    1    45.7400
RF Gap    14   10     0.1815   -40.0000     0.0000     1.0000     0.0000
          15    1    45.7400
Quad #4   16    3    26.2000    96.0000     0.0000     0.0000     0.0000
          17    1    48.7300
RF Gap    18   10     0.1815   -40.0000     0.0000     1.0000     0.0000
          19    1    48.7300
          20    3   -26.2000    48.0000     0.0000     0.0000     0.0000

        This is EXAMPLE-B in the TRACE-3D Documentation Manual
```

Figure 11. Datafile for the initial conditions of Example B displayed using the "P" command.

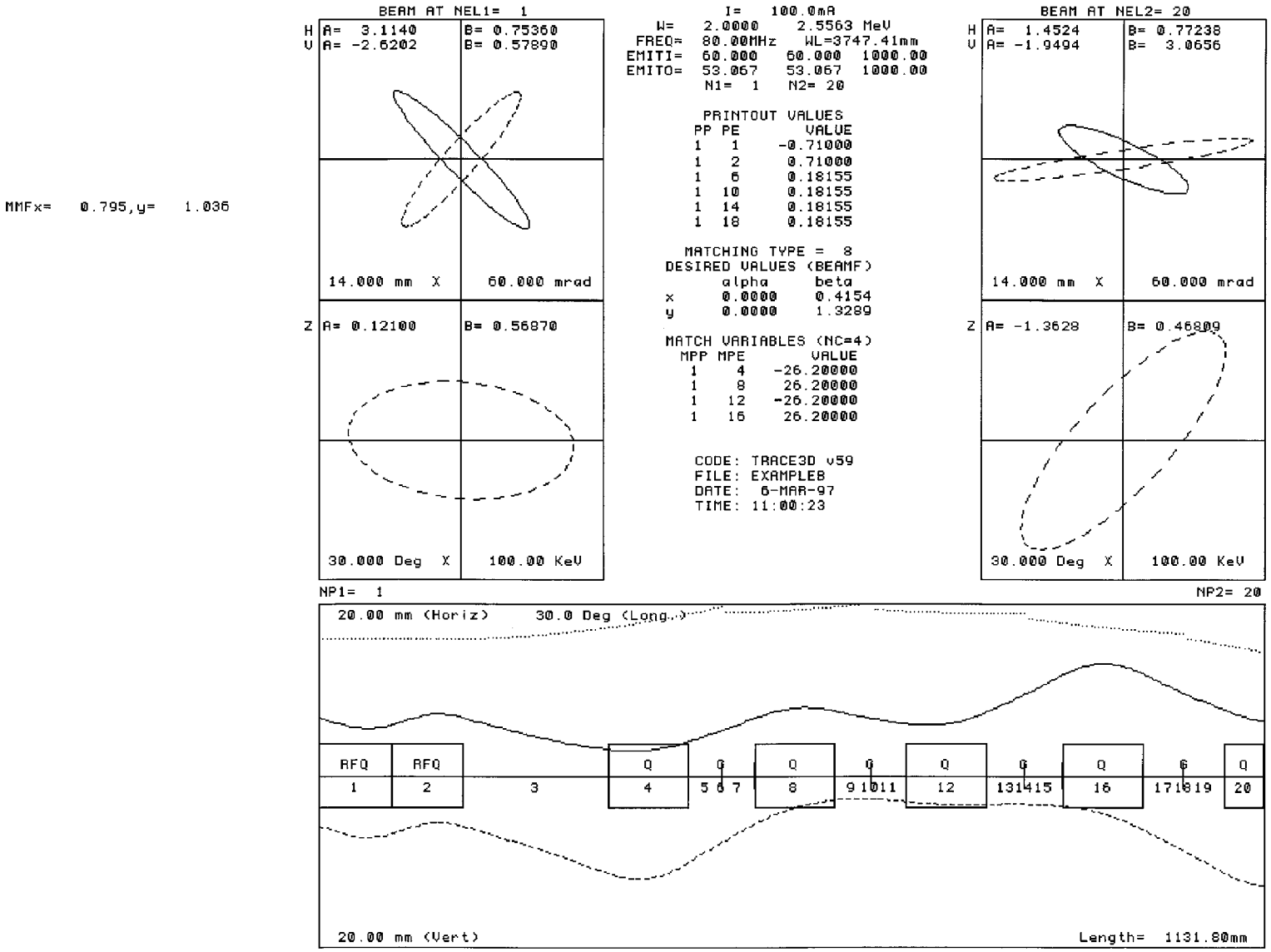

Figure 12. Graphic display for the initial conditions of Example B when beam is followed from the RFQ to the end of cell 4 of the DTL without matching.

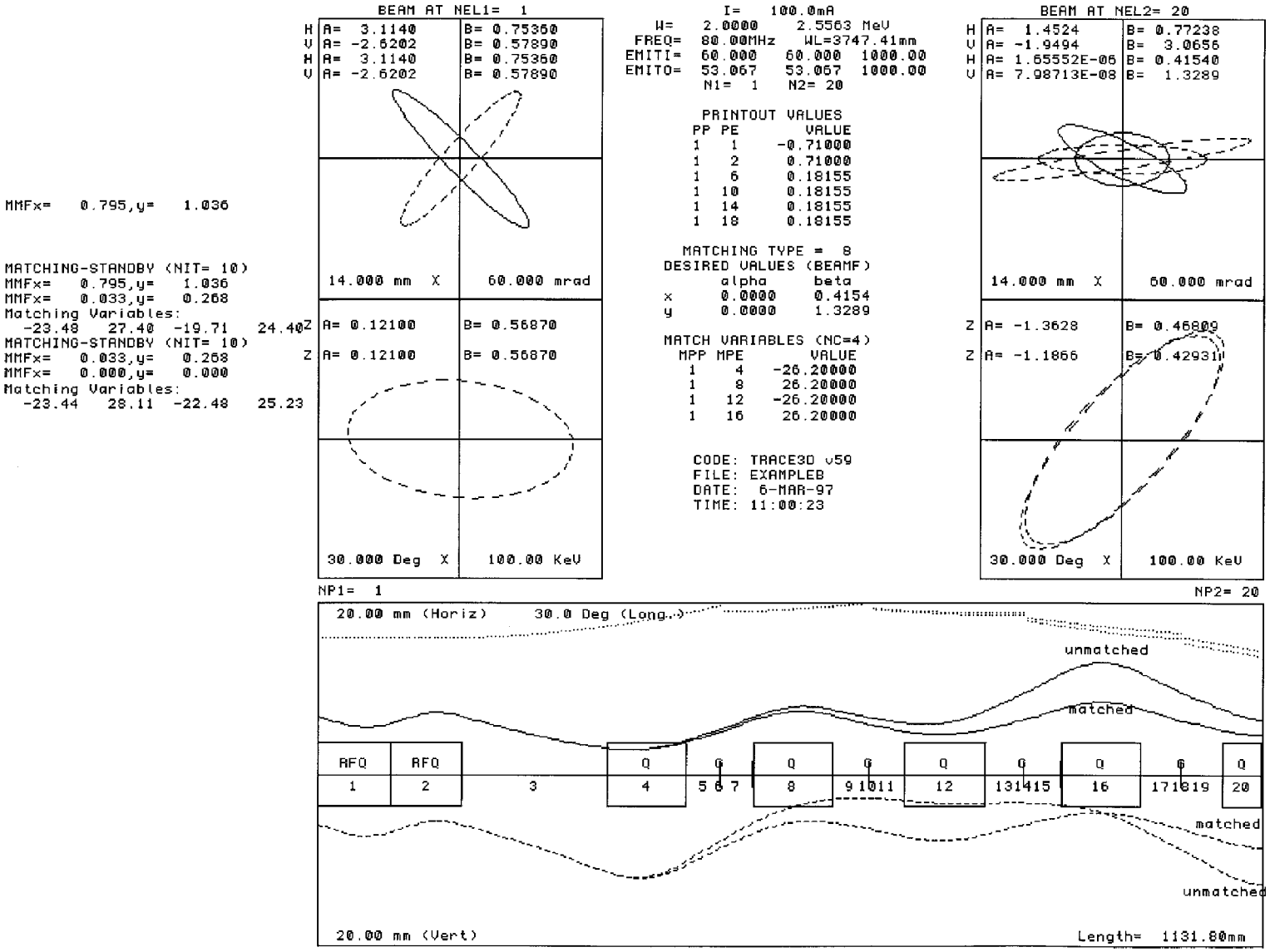

Figure 13. Graphic display showing both the initial conditions of Example B and the final conditions after matching.

11.3 High-Energy Transport with Offset Beam (Example C)

Example C shows the transport of a 6.7-MeV proton beam, modeling "shaker" magnets to deflect the beam centroid with the purpose of rastering a 32x32-mm beamspot up to 250 mm in both transverse planes on the face of a target. This modeling is done by using the rotate/translate element to provide a kick to the beam in both *x'* and *y'*. The datafile is shown in Figure 14, obtained by issuing the "P" command, and the graphics page is shown in Figure 15, obtained by issuing the "G" command. The graphic output shows that the beam centroid is deflected by 250 mm in both the *x* and *y* planes at the position of the target (end of beamline, element 17). The beam centroid is shown by the darker profile; the centroid coordinates were displayed using the "*" centroid command. Notice that the centroid profile has its own scale, modified by input parameter XC. This example also shows the use of different scales for the initial and final phase-space ellipses. The modified beam matrix was displayed using the "Z" command, showing the beam size at the target to be 32x32 mm in the *x-y* plane. This beam size was achieved by using the matching procedure for match type 11 (fitting to specified σ-matrix elements) and varying two quadrupoles in the beamline.

```
UNITS: mm, mrad, T/m, mA, MV/m          FILENAME: EXAMPLEC.NEW
ER=  938.27960   Q= 1.    W=    6.70482   XI=    8.940
EMITI=      1.3301      1.3400     159.7000
BEAMI =    -3.8800      1.0830      2.2600      0.5960      0.2400      0.4128
BEAMCI=     0.0000      0.0000      0.0000      0.0000      0.0000      0.0000
BEAMC =   249.9984     66.7687   -250.0002    -74.8325      0.0000      0.0000
BEAMF =     0.3654      0.7756     -4.8946      6.8124     -1.3950      0.5944
FREQ=  350.000,  PQEXT=  2.50, ICHROM= 0, IBS= 0 XC=275.00
XM=  2.0,  XPM=  6.0000,  YM=  8.0,  DPM= 20.,  DWM=   30.,  DPP= 180.
N1=  1,  N2= 17,   SMAX= 25.0,  PQSMAX=  2.0
NEL1 =   1,  NEL2 =  17,  NP1 =   1,  NP2 =  17
NPRIN= 5 IJPRIN(I,J)= 1  9 1 10 1 11 1 12 1 13 0  0 0  0 0  0 0  0 0  0 0  0
MT= 11   NC=  2   LOC=   0   0   0

     MP(1,N)  MP(2,N)   VALUE        MVC      VALUE
        1        6       14.42
        1        8      -13.50

            n  NT(n)   A(1,n)     A(2,n)     A(3,n)     A(4,n)     A(5,n)
            1    1   140.0000
            2    3    17.9000   122.4000     0.0000     0.0000     0.0000
            3    1   245.0000
            4    3   -17.4000   122.4000     0.0000     0.0000     0.0000
            5    1   500.0000
            6    3    14.4188   122.4000     0.0000     0.0000     0.0000
            7    1   120.0000
            8    3   -13.4997   122.4000     0.0000     0.0000     0.0000
            9    1   240.0000
Rot z-x    10   15    -1.0886     3.0000     0.0000     0.0000
           11    1   400.0000
Rot y-z    12   15    -1.0886     2.0000     0.0000     0.0000
           13    1   300.0000
           14    3     4.4392   240.0000     0.0000     0.0000     0.0000
           15    1    77.5000
           16    3   -11.2211   240.0000     0.0000     0.0000     0.0000
           17    1  3500.0000
```

Figure 14. Datafile for transport system for Example C using the "P" command.

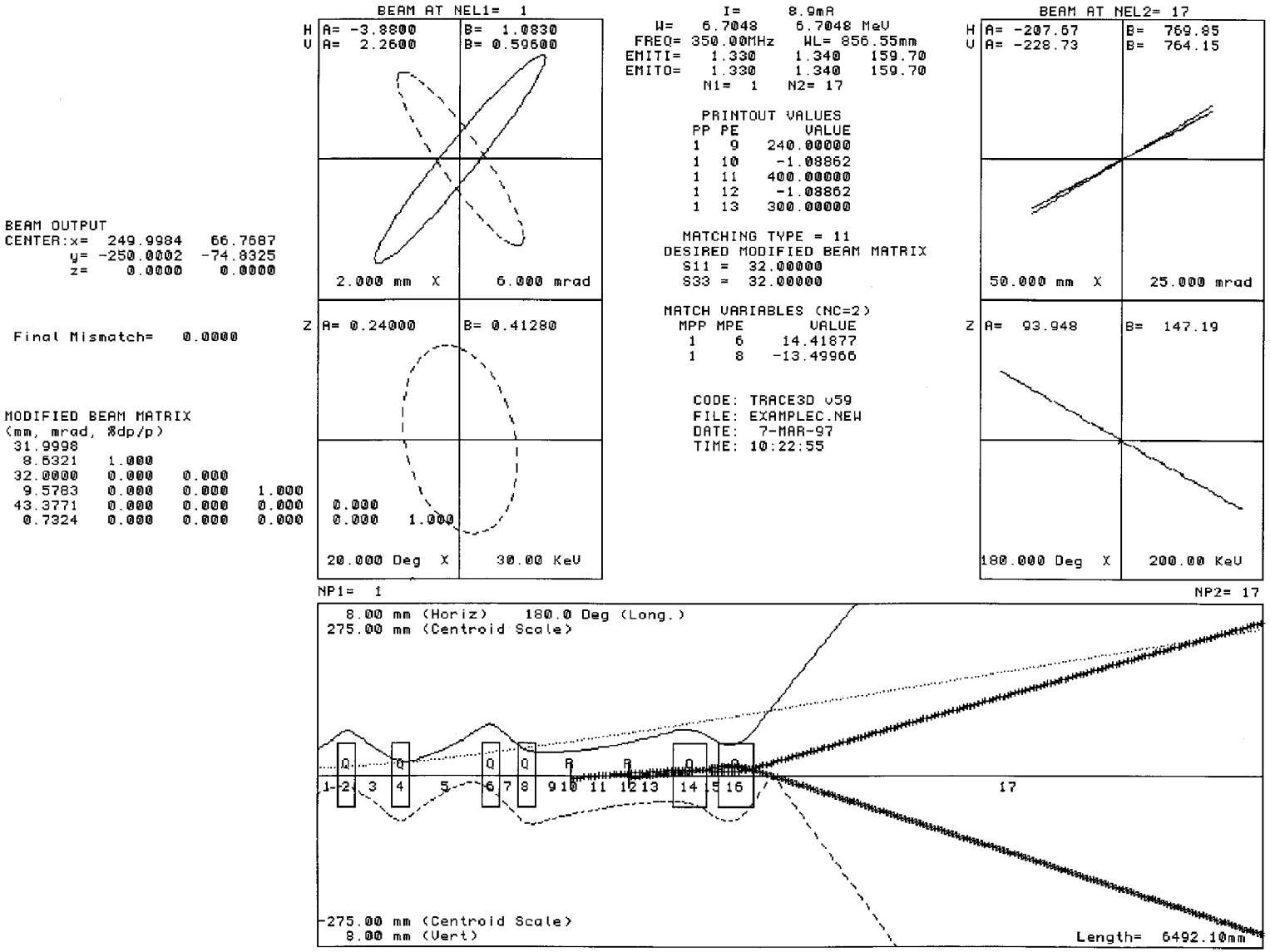

Figure 15. Graphic display for transport system for Example C.

12.0 ACKNOWLEDGMENTS

We would like to express our appreciation to a number of people who assisted in preparing this documentation, including R.S. Mills, G. H. Neuschaefer, and W. P. Lysenko. We also recognize those who have been helpful in maintaining the code, including L. M. Young, J. H. Billen, and W. P. Lysenko. W. P. Lysenko also put together the Wakefield version of TRACE 3-D described in Appendix M, "Wakefields in the TRACE 3-D code."

APPENDIX A: THE σ-MATRIX

The general equation for an *n*-dimensional ellipsoid may be written as

$$\sum_{i=1}^{n}\sum_{j=1}^{n} a_{ij}u_i u_j = 1 \quad ,$$

where u_k denotes distance along the kth coordinate axis. (In TRACE 3-D, *n* is 6 and the coordinates are *x*, *x'*, *y*, *y'*, *z*, and $\Delta p/p$). There are two coefficients for each $u_i u_j$ product when $i \neq j$, namely a_{ij} and a_{ji}. Because only the sum $a_{ij} + a_{ji}$ is important, we can define $a_{ij} = a_{ji}$ without losing any generality, and express the ellipsoid equation in matrix form. Let U be the column vector of the coordinates,

$$U = \begin{Bmatrix} u_1 \\ u_2 \\ \\ u_n \end{Bmatrix} \quad ,$$

and σ^{-1} represent the symmetric coefficient matrix,

$$\sigma^{-1} = \begin{bmatrix} a_{11} & a_{12} & - & - & - & - & a_{1n} \\ a_{21} & a_{22} & - & - & - & - & a_{2n} \\ & & & & & & \\ & & & & & & \\ a_{n1} & a_{n2} & - & - & - & - & a_{nn} \end{bmatrix}$$

The reason for defining this coefficient matrix to be σ^{-1} rather than σ will become apparent later.

The ellipsoid equation in matrix form is

$$U^T \sigma^{-1} U = 1$$

where U^T is the transpose of *U*. For this to represent an *n*-dimensional ellipsoid, all of the diagonal elements of the σ^{-1} matrix must be positive.

Let σ_1^{-1} represent a matrix that defines a particular ellipsoid, and let U_1 be any point on the surface of the ellipsoid. Then

$$U_1^T \sigma_1^{-1} U_1 = 1 \quad .$$

Let R be the transfer matrix that transforms point U_1 to point U_2:

$$U_2 = RU_1$$

The point U_2 will lie on the surface of another ellipsoid having the coefficient matrix σ_2^{-1}. The following matrix manipulations show how to obtain σ_2^{-1} from σ_1^{-1} and R:

$$U_1^T \sigma_1^{-1} U_1 = 1 \quad ,$$

$$U_1^T R^T \left(R^T\right)^{-1} \sigma_1^{-1} R^{-1} R U_1 = 1 \quad ,$$

and

$$\left(RU_1\right)^T \left(R^T\right)^{-1} \sigma_1^{-1} R^{-1} \left(RU_1\right) = 1 \quad ,$$

$$U_2^T \left(R\sigma_1 R^T\right)^{-1} U_2 = 1 \quad .$$

This is the equation for the second ellipsoid, with

$$\sigma_2^{-1} = \left(R\sigma_1 R^T\right)^{-1}$$

or

$$\sigma_2 = R\sigma_1 R^T \quad .$$

Meaning of σ-Matrix Elements

Define a function

$$f(U) = U^T \sigma^{-1} U \quad .$$

The condition *f(U) = constant* defines the surface of a hyperellipsoid (if all diagonal elements of σ^{-1} are positive) and *f(U)* = 1 defines the surface of the particular hyperellipsoid discussed above. At any point *U*, the gradient of *f(U)* is a vector normal to the surface of the hyperellipsoid passing through *U*.

The gradient in *n*-dimensional space is defined as

$$\nabla f = \sum_{k=1}^{n} \frac{\partial f}{\partial u_k} \hat{u}_k \quad ,$$

where $\hat{u}_k$ is the unit vector along the kth coordinate axis. Writing *f(U)* in terms of the matrix elements,

$$f(U) = \sum_{j=1}^{n} \sum_{i=1}^{n} a_{ij} u_i u_j \quad ,$$

the gradient is

$$\nabla f(U) = \sum_{k=1}^{n} \left[\sum_{j=1}^{n} a_{kj} u_j + \sum_{i=1}^{n} a_{ik} u_i \right] \hat{u}_k \quad .$$

Because $a_{ij} = a_{ji}$ and $\hat{u}_k$ is a column vector whose only nonzero element is a 1 in the kth row, the gradient of f can be expressed in matrix notation:

$$\nabla f(U) = 2\sigma^{-1} U \quad .$$

At the point U_k on the surface at which the kth coordinate has its maximum extent, the gradient is parallel to $\hat{u}_k$ and has a magnitude (unknown) of $\left|\nabla f(U_k)\right|$. Then:

$$\sigma^{-1} U_k = \frac{1}{2} \left|\nabla f(U_k)\right| \hat{u}_k \quad ,$$

from which

$$U_k = \frac{1}{2} \left|\nabla f(U_k)\right| \sigma \hat{u}_k \quad ,$$

and

$$U_k^T = \frac{1}{2} \left|\nabla f(U_k)\right| (\sigma \hat{u}_k)^T \quad .$$

For the hyperellipsoid for which *f(U)* = 1,

$$1 = U_k^T \sigma^{-1} U_k$$

$$= \frac{1}{4} \left|\nabla f(U_k)\right|^2 \hat{u}_k^T \sigma \hat{u}_k$$

$$= \frac{1}{4} \left|\nabla f(U_k)\right|^2 \sigma_{kk}$$

where σ_{kk} is the kth diagonal element of the σ-matrix. The magnitude of the gradient at U_k is

$$\left|\nabla f(U_k)\right| = 2 \sqrt{\sigma_{kk}} \quad ,$$

and the point on the surface at the maximum extent in the kth direction is

$$U_k = \sigma \hat{u}_k \Big/ \sqrt{\sigma_{kk}} \quad .$$

The term U_k is the kth column (and, because σ is symmetric, the kth row) of the σ-matrix divided by $\sqrt{\sigma_{kk}}$. In particular, σ_{kk} is the square of the maximum extent of the ellipsoid in the kth direction, and $\sigma_{ki} \Big/ \sqrt{\sigma_{kk}}$ (and $\sigma_{ik} \Big/ \sqrt{\sigma_{kk}}$) is the value of the ith coordinate at the maximum extent in the kth direction. Each off-diagonal element is therefore related to two diagonal elements, and sometimes they are written as

$$\sigma_{ik} = \sigma_{ki} = r_{ik} \sqrt{\sigma_{ii}} \sqrt{\sigma_{kk}} \quad ,$$

where r_{ik} is referred to as the correlation coefficient.

APPENDIX B: TWISS PARAMETERS AND THEIR RELATIONSHIPS TO σ-MATRIX ELEMENTS

The ellipse equation often used in beam-dynamics calculations is:

$$\gamma x^2 + 2\alpha x x' + \beta (x')^2 = \varepsilon \quad ,$$

where $\varepsilon = E/\pi$, the emittance (area of the ellipse) divided by π, and β and γ are positive quantities. In this form α, β, and γ are called the Twiss or Courant-Snyder parameters and are related by:

$$\beta\gamma - \alpha^2 = 1 \ .$$

The ellipse intersects the positive *x*-axis at $x_i = \sqrt{\varepsilon/\gamma}$ and the positive *x'*-axis at $x_i' = \sqrt{\varepsilon/\beta}$, as sketched below.

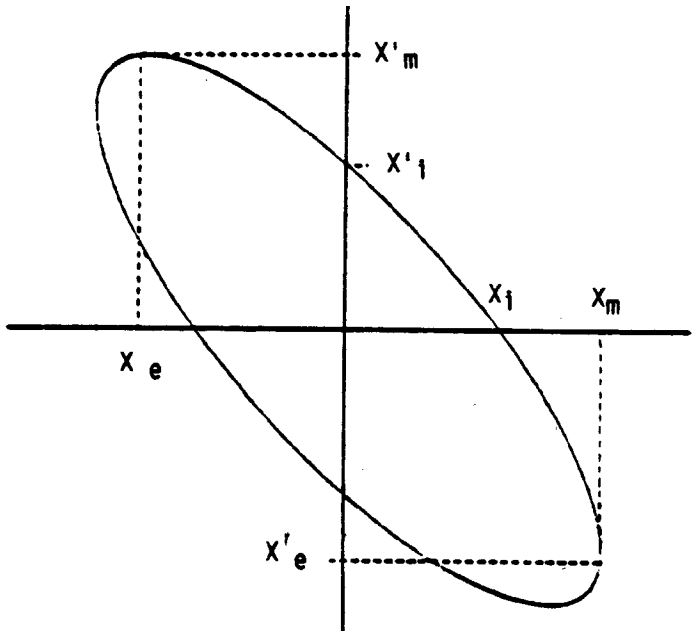

The product of x_i and x_m', the maximum extent of the ellipse in the *x'*-direction, is equal to ε, so $x_m' = \sqrt{\gamma\varepsilon}$. Likewise, $x_m = \sqrt{\beta\varepsilon}$. At the point on the ellipse at which $x' = x_m'$, the *x*-coordinate is $x_e = -\alpha\sqrt{\varepsilon/\gamma}$, and at $x = x_m$, $x_e' = -\alpha\sqrt{\varepsilon/\beta}$. Therefore,

$$\alpha = -\frac{x_e}{x_i} = -\frac{x_e'}{x_i'} \quad .$$

For the ellipse shown above, α is positive.

Relationship Between σ-Matrix and Twiss Parameters

The 6x6 σ-matrix can be partitioned into nine 2x2 submatrices:

$$\sigma = \left[\begin{array}{c|c|c} \sigma_{xx} & \sigma_{xy} & \sigma_{xz} \\ \hline \sigma_{yx} & \sigma_{yy} & \sigma_{yz} \\ \hline \sigma_{zx} & \sigma_{zy} & \sigma_{zz} \end{array}\right]$$

The σ_{xx}, σ_{yy}, and σ_{zz} submatrices are related to the Twiss parameters in the *x-x'*, *y-y'*, and *z-*$\Delta p/p$ planes, respectively. In Appendix A, it is shown that the six diagonal elements of the σ-matrix are the squares of the maximum extent of the ellipsoid in each of the six directions, and that the σ_{ij} is the product of the maximum extent in the jth direction and the value of the ith coordinate at that maximum extent. Then

$$\sigma_{xx} = \left[\begin{array}{cc} x_m^2 & x_e x'_m \\ x'_e x_m & \left(x'_m\right)^2 \end{array}\right]$$

Using the relationships derived above for α, β, and γ,

$$\sigma_{xx} = \left[\begin{array}{cc} \beta_x \varepsilon_x & -\alpha_x x_i x'_m \\ -\alpha_x x'_i x_m & \gamma_x \varepsilon_x \end{array}\right]$$

where the subscript *x* has been appended to α, β, γ, and ε to denote properties on the *x-x'* plane. Because $x_i x'_m = x'_i x_m = \varepsilon_x$, this reduces to

$$\sigma_{xx} = \left[\begin{array}{cc} \beta_x \varepsilon_x & -\alpha_x \varepsilon_x \\ -\alpha_x \varepsilon_x & \gamma_x \varepsilon_x \end{array}\right]$$

having a determinant

$$det\left(\sigma_{xx}\right) = \left(\beta_x \gamma_x - \alpha_x^2\right)\varepsilon_x^2$$

$$= \varepsilon_x^2 \quad .$$

APPENDIX C: MISMATCH FACTOR

As the name implies, the mismatch factor is a quantitative measure of the difference between two ellipses having the same area and the same center. If the two ellipses are not identical, one ellipse could be enlarged so that it just encloses the other ellipse; the amount of enlargement is related to the mismatch factor.

One way of looking at the problem is as follows (see Figure C-1): First, find the transformation that maps one of the ellipses into a circle, and apply the same transformation to the second ellipse to get a modified ellipse. Denote the radius of the circle by R_C and the length of the major semiaxis of the ellipse by R_E. Because the ellipse and the circle have the same area, R_E will be greater than or equal to R_C. The mismatch factor used in TRACE is:

$$M = \frac{R_E}{R_C} - 1 \quad .$$

Periodic beam-transport systems have matched conditions if they are stable. That is, if one matches a beam to the transport system, and if one could measure the size of the beam at the same location in each period of the system, then one would see a constant beam size. A mismatched beam would oscillate about this matched size, and at some places the beam would be larger by a factor of 1 + M. For example, a mismatch factor of 0.1, defined as above, would mean that the beam would occasionally be 10% larger than if it were matched. An example of two ellipses having a mismatch factor of 0.1 is shown in Figure C-1.

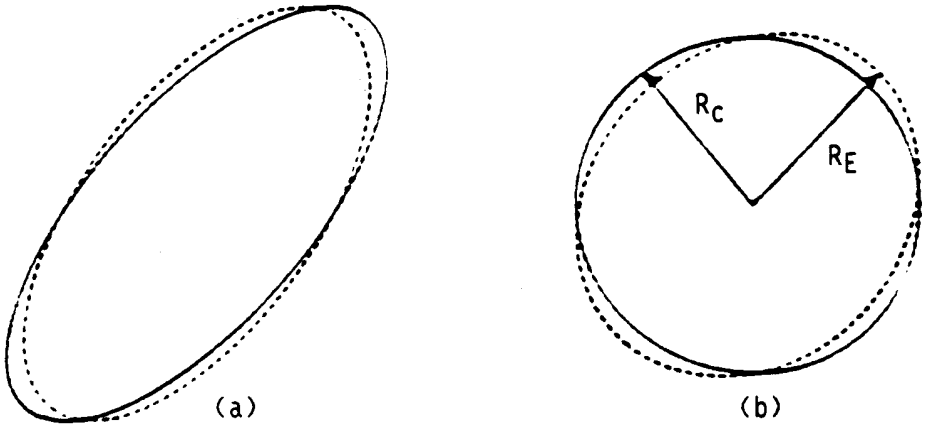

Figure C-1. An example of two ellipses having a mismatch factor of 0.1, shown before (a) and after (b) being transformed to a coordinate system in which the solid ellipse is a circle.

A word of caution is in order. It is quite common in the literature for the mismatch factor to be defined as $\left(R_E/R_C\right)^2 - 1$, which relates to how much the area of the circle would have to be increased to enclose the ellipse. If this definition is used, one would calculate a mismatch factor of 0.21 for the example given above.

The mismatch factor (as defined above) between the two ellipses

$$\gamma x^2 + 2\alpha x x' + \beta (x')^2 = \varepsilon$$

and

$$G x^2 + 2A x x' + B (x')^2 = \varepsilon$$

is given by

$$M = \left[\frac{1}{2}\left(R + \sqrt{R^2 - 4}\right)\right]^{1/2} - 1 \quad ,$$

where

$$R = \beta G + B\gamma - 2\alpha A \quad .$$

APPENDIX D: RMS EMITTANCE AND THE EQUIVALENT UNIFORM BEAM

The TRACE 3-D code computes the evolution of the σ-matrix elements, given their initial values. The user normally specifies the initial conditions by specifying the values of the emittances and Twiss parameters in the three planes. Computing the σ-matrix elements is equivalent to computing the second moments of the phase-space distribution or the rms envelope sizes (and their derivatives).

The space-charge calculation in TRACE 3-D is based on the results of Sacherer,* which are as follows:

1. The evolution of the rms envelope depends only on the linear parts of the space-charge forces, where the force constants are determined by least-squares fitting.
2. The least-squares space-charge force constants depend primarily on the second moments of the charge distribution and very little on the details of the distribution.

The above assumes the external (focusing) forces are linear.

Let us define the mean value of a quantity *g* defined on 6-D phase space by $\bar{g} = \int g f d^6V$, where the distribution function f is normalized so that $\int f d^6V = 1$. Then the rms value of *x*, for example, is the square root of the second moment $\overline{x^2}$.

The evolution of the σ-matrix elements depends on the quantities $\overline{u_i E_j}$, where u_i represents the three coordinates *x*, *y*, and *z*, and where the E_j represents the three components of the space-charge electric field E_x, E_y, and E_z. Now fit the electric field to a linear model ($E_x = k_x x$, and similarly in the other planes). Choose the constant k_x by minimizing the least-squares residual $\overline{\left(E_x - k_x x\right)^2}$. The result is

$$k_x = \frac{\overline{xE_x}}{\overline{x^2}} \quad ,$$

which establishes the first of Sacherer's results since the quantity $\overline{xE_x}$, which occurs in the evolution equation, can be replaced by $k_x \overline{x^2}$. This result is valid for one, two, and three degrees of freedom.

* F. Sacherer, "RMS Envelope Equation with Space Charge," CEPN/SI/Internal report 70-12, Geneva, Switzerland (1970).

Sacherer showed his second result by computing the field constants for several different charge distributions. He found that the field constants for the various distributions, which differed in shape but had the same value of second moments $\overline{u_i u_j}$, were very nearly equal. (This again is valid for one, two, and three degrees of freedom.) TRACE 3-D uses this fact by computing the field constants assuming a charge distribution that is uniform in an ellipsoid in *x*, *y*, and *z*, and has the correct rms values. In this case, the fields are linear, so the least-squares formula above becomes trivial. The least-squares constants are just the linear Taylor-series coefficients. Because of Sacherer's result, it is not necessary that the TRACE 3-D model preserve the uniformity of this equivalent uniform beam. At each integration step, the code computes the field constants assuming a new uniform in beam *x-y-z* that has the correct second moments.

Because the fields assumed in TRACE 3-D are linear, if we fixed the field constants, we could multiply all six phase-space variables by the same constant and get the same results (after unscaling at the end). But, of course, the code computes the space-charge field constants from the beam size. Therefore, it is important that our equivalent uniform beam has the same second moments for the spatial coordinates as the beam we are trying to simulate.

For a charge distribution that is a uniform ellipsoid in *x*, *y*, and *z*, the second moments are one-fifth of the maximum values. We can see this by computing, for example, the following:

$$\overline{x^2} = \frac{1}{4/3\,\pi}\int_{-1}^{1} dz \int_{-\sqrt{1-z^2}}^{\sqrt{1-z^2}} dy \int_{-\sqrt{1-z^2-y^2}}^{\sqrt{1-z^2-y^2}} dx x^2 = \frac{1}{5}$$

Here, the variables are normalized by their maximum values.

If we have a description of a beam in terms of its rms values, we must multiply the spatial coordinates (*x*, *y*, and *z*) by $\sqrt{5}$ to get an equivalent uniform beam that gives the correct space-charge field constants. But to preserve the form of the evolution equations that the TRACE 3-D code numerically integrates, we must also multiply the angle coordinates (*x′*, *y′*, and *z′*) by the same factor of $\sqrt{5}$. Beam emittances are areas in 2-D projections of the 6-D phase space onto the planes *(x, x′)*, (*y, y′*), and *(z, z′).* This means the uniform equivalent beam that TRACE 3-D requires has emittances that are five times the rms values.

APPENDIX E: FIELD FORMULA FOR THE PERMANENT-MAGNET QUADRUPOLE (PMQ)

The PMQ field formulae are obtained from the referenced paper* to which we refer the reader for further discussion and for the assumptions under which the formulae are valid. The formulae are based on the rare-earth-cobalt (REC) quadrupole of the standard design using trapezoidal blocks as shown in Figure E-1 and are derived using a semi-infinite model with a flat-cut end (Figure E-2).

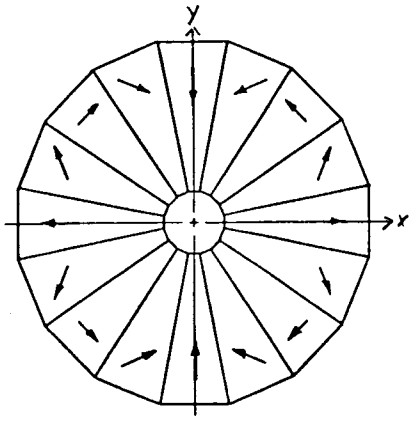

Figure E-1. Cross section of segmented REC quadrupole (beam perpendicular to drawing plane)

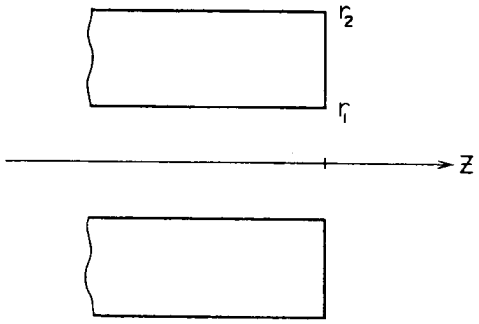

Figure E-2. Cross section through semi-infinite REC quadrupole (beam in drawing plane).

The fringe field to first order is as follows:

$$B_x(x,y,z) = G(z)y = G_0F(z)y \ ,$$

$$B_y(x,y,z) = G(z)x = G_0F(z)x \ , \quad \text{and}$$

$$B_z = 0$$

where the gradient *G(z)* is expressed in terms of the peak value G_0 times the fringe-field function *F(z):*

$$G(z) = G_0F(z) \quad .$$

G_0 refers to the maximum magnetic field gradient (the same as the TRACE 3-D PMQ gradient input value *B'*), which is determined by dividing the total integrated field gradient by the physical length of the magnet. The fringe field function *F(z),* as shown in Figure E-3, is given by the following:

* K. Halbach, "Physical and Optical Properties of REC Magnets," *Nucl. Instrum. Meth.* **187**, 109-117 (1981).

$$F(z)=\frac{1}{2}\left\{1-\frac{z}{8}\left(\frac{1}{r_1}+\frac{1}{r_2}\right)\left[\frac{\upsilon_1^2\upsilon_2^2\left(\upsilon_1^2+\upsilon_1\upsilon_2+\upsilon_2^2+4+8/\upsilon_1\upsilon_2\right)}{\upsilon_1+\upsilon_2}\right]\right\} \quad ,$$

where

$$\upsilon_i=\left[1+\left(\frac{z}{r_i}\right)^2\right]^{-1/2} \quad , \quad i= 1,2,...$$

$G_0 \quad = 2B_rC_2\left(1/r_1-1/r_2\right)=2G(0)=G(-\infty)$,
B_r = magnitude of remnant magnetization of REC material,
r_1 = inner radius of quadrupole,
r_2 = outer radius of quadrupole,
C_2 = sin (3π/M)/(3π/M), and
M = number of trapezoidal blocks composing the magnet.

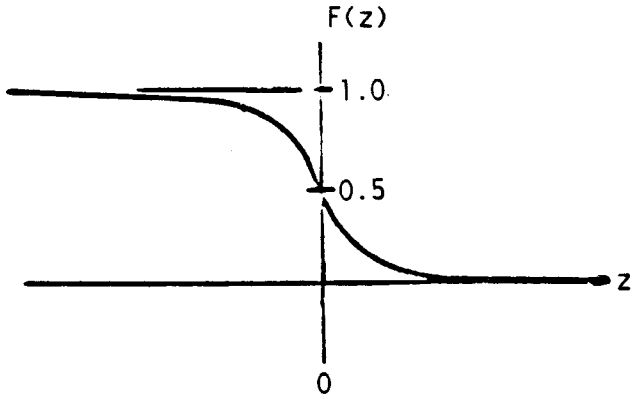

Figure E-3. Quadrupole fringe-field function. Note that F(–z) = 1–F(z).

To find the fringe field for a quadrupole of finite physical length l_p, a second semi-infinite magnet of opposite sign is superimposed on the first semi-infinite magnet with a nonoverlapping distance equal to l_p. The fields are added, resulting in the fringe field as shown in the lower portion of Figure E-4.

For doublets, triplets, or any combination of PMQs, the total fringe field G_t is found by summing the individual gradients *G(z)* as follows:

$$G_t=\sum_{i=1}^{n}G_i\left(z_i\right)=G_{0i}F_i\left(z_i\right) \quad , \quad i=1,n$$

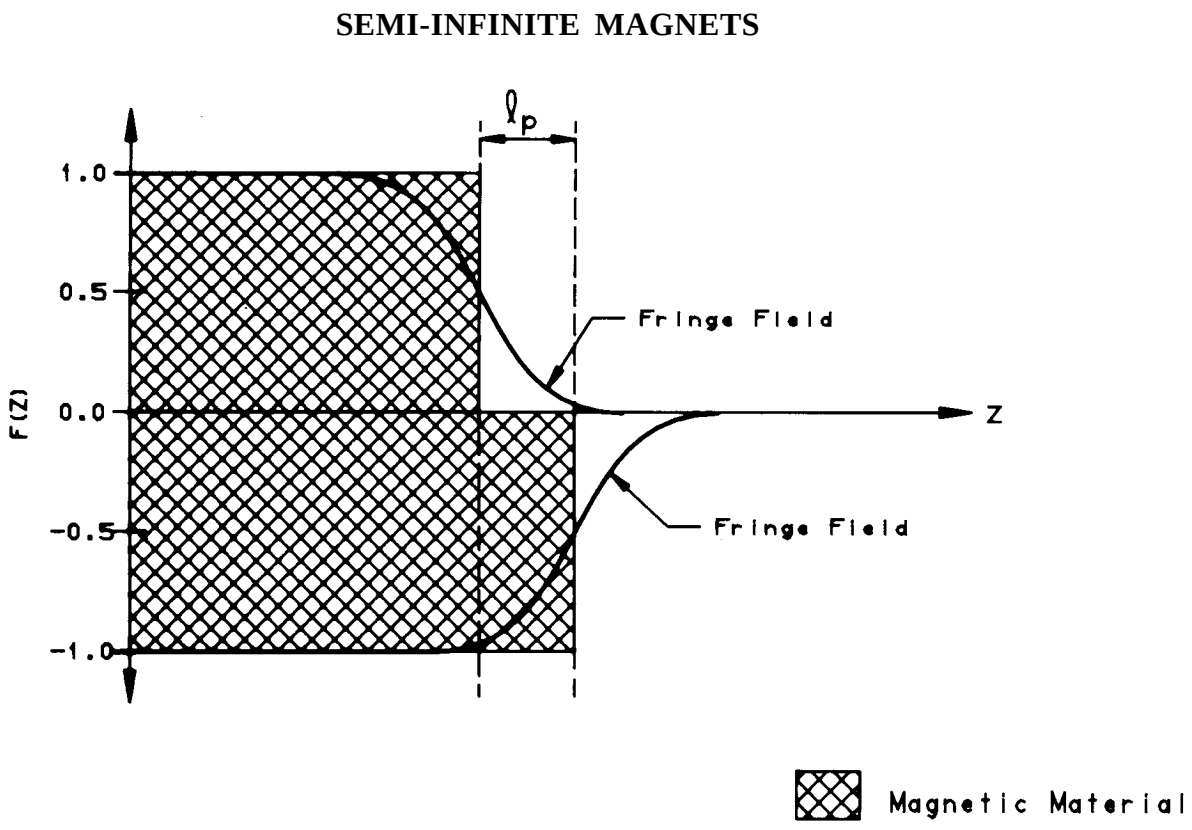

Figure E-4. Two semi-infinite magnets, nonoverlapping (offset) by l_p, resulting in a fringe field for the PMQ of length l_p.

APPENDIX F: EMITTANCE INCREASE IN AN RF GAP

Weiss* has calculated the increase in the rms emittance of a bunched beam as it crosses an RF gap. The gap is treated as a thin lens, and the impulse coefficients are given in Section 6.10 of this report. The emittances increase because the transverse impulses depend on ϕ, the phase of the RF when a particle arrives at the gap, and ϕ differs from one end of the bunch to the other. The transfer matrix is calculated assuming that the phase is constant at ϕ_s, the phase when the beam center is at the gap.

At the gap, the x-coordinate is unchanged and the x'-coordinate is changed by

$$x'_f = \eta x'_i + k'_x x_i \sin\phi \quad ,$$

where

$$\eta = (\beta\gamma)_i / (\beta\gamma)_f \quad ,$$

$$k'_x = -\frac{\pi |q| E_0 T L}{m_0 c^2 \overline{\beta}^2 \overline{\gamma}^2 (\beta\gamma)_f \lambda} \quad ,$$

and where the i and f subscripts denote initial (before the gap) and final (after the gap) values, and the bars denote average values.

The second moments before and after the gap are related as follows:

$$\overline{x_f^2} = \overline{x_i^2} \quad ,$$

$$\overline{x'^2_f} = \eta^2 \overline{x'^2_i} + 2\eta k'_x \overline{x_i x'_i \sin\phi} + k'^2_x \overline{x_i^2 \sin^2\phi} \quad ,$$

and

$$\overline{x_f x'_f} = \eta \overline{x_i x'_i} + k'_x \overline{x_i^2 \sin\phi} \quad .$$

Assuming that ϕ is uncorrelated with x and x', the averages are given by

$$\overline{x_i^2 \sin\phi} = \overline{x_i^2} \sin\phi_s f(\Delta\phi) \quad ,$$

$$\overline{x_i x'_i \sin\phi} = \overline{x_i x'_i} \sin\phi_s f(\Delta\phi) \quad ,$$

and

---

* M. Weiss, "Bunching of Intense Proton Beams with Six-Dimensional Matching to the Linac Acceptance," CERN/MPS/LI report 73-2, Geneva, Switzerland (1978).

$$\overline{x_i^2 \sin^2\phi} = \overline{x_i^2} g(\phi_s, \Delta\phi) \quad ,$$

where $\Delta\phi$ is the half-width of the phase spread,

$$f(\Delta\phi) = \frac{15}{(\Delta\phi)^2}\left[\frac{3}{(\Delta\phi)^2}\left(\frac{\sin\Delta\phi}{\Delta\phi} - \cos\Delta\phi\right) - \frac{\sin\Delta\phi}{\Delta\phi}\right]$$

and

$$g(\phi_s, \Delta\phi) = \frac{1}{2}\left[1 + \left(\sin^2\phi_s - \cos^2\phi_s\right) f(2\Delta\phi)\right]$$

in the limit when $\Delta\phi \to 0$, $f(\Delta\phi) \to 1$, and $g(\phi_s, \Delta\phi) \to \sin^2\phi_s$.

Substituting the above averages into the equations for the second moments,

$$\overline{x_f'^2} = \eta^2 \overline{x_i^2} + 2\eta k_x' \sin\phi_s \cdot f(\Delta\phi)\overline{x_i x_i'} + k_x'^2 g(\phi_s, \Delta\phi)\overline{x_i^2}$$

and

$$\overline{x_f x_f'} = \eta \overline{x_i x_i'} + k_x' \sin\phi_s \cdot f(\Delta\phi)\overline{x_i^2} \quad .$$

If the original equation for x_f' is replaced by

$$x_f' = \eta x_i + k_x' \sin\phi_s \cdot f(\Delta\phi) x_i \quad ,$$

then one obtains the above second moments if a term $\Delta\overline{x_f'^2}$ is added to $\overline{x_f'^2}$, where

$$\Delta\overline{x_f'^2} = k_x'^2\left[g(\phi_s, \Delta\phi) - \sin^2\phi_s \cdot f^2(\Delta\phi)\right]\overline{x_i^2} \quad .$$

The increase in the square of the rms emittance is

$$\Delta\varepsilon_{rms}^2 = \overline{x_f^2}\Delta\overline{x_f'^2} \quad .$$

If the center of the beam is displaced from the axis by a distance ξ, the emittance growth is increased further. In fact, if the beam is off-axis by one rms width, the emittance growth doubles over that of an on-axis beam. The increase in $\overline{x_f'^2}$ is given by

$$\Delta\overline{x_f'^2} = k_x'^2\left[g(\phi_s,\Delta\phi) - sin^2\,\phi_s \cdot f^2(\Delta\phi)\right]\left(\overline{x_i^2} + \xi^2\right) \quad .$$

The increase in the longitudinal emittance is calculated in a similar way. In an RF gap, the longitudinal force constant is

$$k_z' = -2k_x'\overline{\gamma}^2 \quad .$$

This value is multiplied by

$$\left[1 + \frac{(\Delta\phi)^2}{12}\right] \ ,$$

and $\overline{(\Delta p/p)^2}$ is increased by

$$\Delta\overline{\left(\frac{\Delta p}{p}\right)^2} = k_z'^2(\Delta\phi)^2\overline{z_i^2}\left[\frac{cos^2\,\phi_s}{8} + \frac{\Delta\phi\, sin\,\phi_s}{576}\right] \quad .$$

APPENDIX G: ELECTROMAGNETIC FIELDS IN CYLINDRICAL CAVITIES*

For cylindrical cavities resonating in the TM_{010} standing-wave mode, the only nonzero components of the electromagnetic field are E_r, E_z, and B_θ, and these quantities are independent of θ. The stationary solutions have a harmonic dependence on time; therefore,

$$E_z(r,z,t) = E_z(r,z)\sin\omega t \quad ,$$

where ω is the angular frequency of the standing wave. The term $E_z(r,z)$ can be expressed by a Fourier series in z. Let L denote the length of the cavity, and take the origin of the coordinate system to be at the center of the cavity. Then

$$E_z(r,z) = \sum_m \left[a_m(r)\cos\frac{m\pi z}{L} + b_m(r)\sin\frac{m\pi z}{L} \right] \quad .$$

We now restrict ourselves to consider accelerating structures operating in the π-mode in which alternating cavities are 180° out of phase (one complete period consists of two cavities). We also assume E_z to be symmetric about the center of the cavity. These restrictions imply that $b_m = 0$ for all m, and $a_m = 0$ when m is zero and even integers. Then

$$E_z(r,z,t) = \sum_m a_m(r)\cos\frac{m\pi z}{L}\sin\omega t \quad , \quad m=1,3,5...$$

Inserting this expression into the wave equation

$$\frac{\partial^2 E_z}{\partial z^2} + \frac{1}{r}\frac{\partial E_z}{\partial r} + \frac{\partial^2 E_z}{\partial r^2} = \frac{1}{c^2}\frac{\partial^2 E_z}{\partial t^2} \quad ,$$

we obtain

$$\sum_m \left[\frac{d^2 a_m}{dr^2} + \frac{1}{r}\frac{da_m}{dr} - k_m^2 a_m \right] = 0 \quad ,$$

where

---

* H. G. Hereward, "The General Theory of Linear Accelerators," in *Linear Accelerators*, P. N. Lapostolle and A. L. Septier, Eds. (North Holland Publishing Co., Amsterdam, 1969), and
L. Smith, "Linear Accelerators," in *Hanbuch der Physik* (Springer Verlag, Berlin, 1959), Vol. 44.

$$k_m^2 = \left(\frac{m\pi}{L}\right)^2 - \left(\frac{\omega}{c}\right)^2 = \left(\frac{m\pi}{L}\right)^2 - \left(\frac{2\pi}{\lambda}\right)^2 \quad .$$

Each term in the above sum will be zero if

$$a_m = A_m I_0(k_m r) \quad \text{when } k_m^2 \geq 0 \ ,$$

and

$$a_m = A_m J_0(k_m r) \quad \text{when } k_m^2 < 0 \ ,$$

where J_0 is the standard Bessel function of order zero, and I_0 is the modified Bessel function of order zero. The value of k_m^2 will normally be positive (although if $L > \lambda/2$, k_1^2 will be negative), thus the modified Bessel functions will be used below.

Having obtained an expression for $E_z(r,z,t)$, similar expressions can be obtained for $E_r(r,z,t)$ and $B_\theta(r,z,t)$ by using the Maxwell equations

$$\nabla \cdot \dot{E} = 0$$

and

$$\nabla \cdot \dot{B} = \frac{1}{c^2}\frac{\partial \dot{E}}{\partial t} \quad .$$

For our particular geometry and symmetry assumptions, these equations reduce to

$$\frac{1}{r}\frac{\partial}{\partial r}(rE_r) = -\frac{\partial E_z}{\partial z} \quad ,$$

$$\frac{\partial B_\theta}{\partial z} = -\frac{1}{c^2}\frac{\partial E_r}{\partial t} \quad ,$$

and

$$\frac{1}{r}\frac{\partial}{\partial r}(rB_\theta) = \frac{1}{c^2}\frac{\partial E_z}{\partial t} \quad .$$

The results, which can be verified by using the recurrence formula,

$$I_1(x) + x\frac{d}{dx}I_1(x) = xI_0(x) \quad ,$$

are

$$E_z(r,z,t) = \sum_m A_m I_0(k_m r)\cos\frac{m\pi z}{L}\sin\omega t \quad ,$$

$$E_r(r,z,t) = \sum_m \frac{A_m m\pi}{k_m L} I_1(k_m r) \sin\frac{m\pi z}{L} \sin\omega t \quad ,$$

and

$$B_\theta(r,z,t) = \sum_m \frac{A_m \omega}{k_m c^2} I_1(k_m r) \cos\frac{m\pi z}{L} \cos\omega t \quad .$$

The A_m coefficients can be determined for a particular geometry by Fourier analyzing the $E_z(r, z)$ values calculated by SUPERFISH. The results are usually normalized so that the average axial accelerating field E_0 is 1 MV/m, where

$$E_0 = \frac{1}{L} \int_{-L/2}^{L/2} E_z(0,z) dz \quad .$$

The field components are linearized by replacing $I_0(k_m r)$ by 1 and $I_1(k_m r)$ by $k_m r/2$. Also, substituting $2\pi c/\lambda$ for ω and ϕ for ωt, the linearized components are

$$E_z(r,z,\phi) = E_0 \sum_m A_m \cos\frac{m\pi z}{L} \sin\phi \quad ,$$

$$E_r(r,z,\phi) = E_0 \sum_m A_m \frac{m\pi}{2L} \sin\frac{m\pi z}{L} \sin\phi r \quad ,$$

and

$$B_\theta(r,z,\phi) = E_0 \sum_m A_m \frac{\pi}{c\lambda} \cos\frac{m\pi z}{L} \cos\phi r \quad .$$

In moving a distance Δs through a constant accelerating field E_z, the energy of the beam changes from W to $W + \Delta W$, where

$$\Delta W = E_z \Delta s \ .$$

The average energy over the distance Δs is

$$\overline{W} = W + \Delta W/s \ .$$

The change in the x-component of the normalized momentum that is due to constant E_r and B_θ fields applied for a distance Δs is

$$\Delta(\beta\gamma)_x = \frac{q\Delta s}{m_0 c^2 \overline{\beta}}\left(E_r - v_z B_\theta\right) x/r$$

$$= \frac{\pi q E_0 \Delta s}{m_0 c^2 \overline{\beta}} \sum_m A_m \left[\frac{m}{2L} sin\frac{m\pi z}{L} sin\phi - \frac{\overline{\beta}}{\lambda} cos\frac{m\pi z}{L} cos\phi\right] x$$

$$= k_x x \quad ,$$

where $\overline{\beta}$ is *v/c* for particles having energy $\overline{W}$. The impulse coefficient k_y is identical to k_x.

The change in $\Delta(\beta\gamma)_z$ caused by a particle arriving at a particular location in the cavity when the RF phase is $\phi + \Delta\phi$ rather than ϕ is

$$\Delta\left[\Delta(\beta\gamma)_z\right] = \frac{q\Delta s}{m_0 c^2 \overline{\beta}} \frac{\partial E_z}{\partial \phi} \Delta\phi \quad .$$

The longitudinal displacement, *z′*, of a particle from the center of the beam is related to the phase displacement $\Delta\phi$ by

$$z' = -\beta\lambda\Delta\phi/2\pi \quad ;$$

so the change in $\Delta(\beta\gamma)_z$ is

$$\Delta\left[\Delta(\beta\gamma)_z\right] = k_z z'$$

$$= -\frac{2\pi q \Delta s E_0}{m_0 c^2 \overline{\beta}^2 \lambda} \sum_m A_m z' cos\frac{m\pi z}{L} cos\phi \quad .$$

In this appendix, *z* denotes the longitudinal displacement from the center of the cavity, and *z′* denotes longitudinal displacement from the center of the beam ellipsoid.

APPENDIX H: COUPLED CAVITY TANKS

A tank element implies a sequence of identical cylindrical cavities, coupled in some way to permit power flow. The fields in adjacent cells (cavities) are assumed to be 180° out of phase, and a standing-wave TM_{010} mode is assumed. Tank transformations are valid when the beam velocity does not change appreciably as the particles go through the tank, and the time-of-flight through two cavities is approximately one RF period. In this case, the detailed shapes of the fields in a cavity are not very important as long as their averages over one cavity (or a half-cavity) are correct.

A reasonable approximation for the longitudinal electric field is

$$E_z(r,z,t) = AI_0(kr)\cos\frac{\pi z}{L}\sin\omega t \quad ,$$

where

$$k^2 = \left(\frac{\pi}{L}\right)^2 - \left(\frac{2\pi}{\lambda}\right)^2 \quad .$$

This is the first term in the Fourier expansion for $E_z(r,z,t)$ given in Appendix G. A quantity whose value is usually specified for a tank is E_0T, the effective accelerating field, the product of the average axial-electric field and the transit-time factor. This quantity is defined by

$$E_0T = \frac{1}{L}\int_{-L/2}^{L/2}\left[E_z(0,z)\cos(\pi z/L)\right]dz \quad .$$

Putting in the assumed form for E_z, and integrating, we find

$$A = 2E_0T \quad .$$

The three nonzero field components are

$$E_z(r,z,t) = 2E_0TI_0(kr)\cos(\pi z/L)\sin\omega t \quad ,$$

$$E_r(r,z,t) = \frac{2\pi E_0T}{kL}I_1(kr)\sin(\pi z/L)\sin\omega t \quad ,$$

and

$$B_\theta(r,z,t) = \frac{2E_0T\omega}{kc^2} I_1(kr)\cos(\pi z/L)\cos\omega t \quad ,$$

where $\omega = 2\pi c/\lambda$ is the angular frequency of the RF and $z = 0$ at the middle of a cavity. Using the assumptions mentioned earlier, ωt can be replaced by $\pi z/L + \phi + \pi/2$, where ϕ is the phase of the RF when the center of the beam arrives at the beginning of the cavity. Then

$$\begin{aligned} \cos\omega t &= \cos(\pi z/L)\cos(\phi + \pi/2) - \sin(\pi z/L)\sin(\phi + \pi/2) \\ &= -\cos(\pi z/L)\sin\phi - \sin(\pi z/L)\cos\phi \quad , \\ \sin\omega t &= \sin(\pi z/L)\cos(\phi + \pi/2) + \cos(\pi z/L)\sin(\phi + \pi/2) \\ &= -\sin(\pi z/L)\sin\phi + \cos(\pi z/L)\cos\phi \quad . \end{aligned}$$

The calculation of the averages of the field components over each half of a cavity (assuming *r* is constant) involves finding the averages of $\cos^2(\pi z/L)$, $\sin^2(\pi z/L)$, and $\sin(\pi z/L)\cos(\pi z/L)$. Over the first half of a cavity ($-L/2 \le z \le 0$),

$$\overline{\cos^2(\pi z/L)} = \overline{\sin^2(\pi z/L)} = 1/2 \quad ,$$

$$\overline{\sin(\pi z/L)\cos(\pi z/L)} = -1/\pi \quad .$$

The average, linearized, field components in the first half of a cavity are

$$\overline{E_{z1}} = 2E_0T\left(\frac{\sin\phi}{\pi} + \frac{\cos\phi}{2}\right) \quad ,$$

$$\overline{E_{r1}} = -\frac{\pi E_0T}{L}\left(\frac{\cos\phi}{\pi} + \frac{\sin\phi}{2}\right)r \quad ,$$

$$\overline{B_{\theta 1}} = \frac{\pi E_0T\beta}{cL}\left(\frac{\cos\phi}{\pi} - \frac{\sin\phi}{2}\right)r \quad ,$$

where we have used $L = \beta\lambda/2$. The change in the beam energy in the first half of a cavity is

$$\begin{aligned} \Delta W_1 &= q\overline{E_{z1}}\,L/2 \\ &= qE_0TL\left(\frac{\cos\phi}{2} + \frac{\sin\phi}{\pi}\right) \quad . \end{aligned}$$

The average energy in the first half is assumed to be

$$\overline{W_1} = W + \Delta W_1/2 \quad ,$$

where W is the energy at the beginning of the cavity. The average normalized velocity is $\overline{\beta_1}$ calculated from $\overline{W_1}$. The average radial force is

$$\overline{F_{r1}} = q\left(\overline{E_{r1}} - \overline{\beta_1} c \overline{B_{\theta 1}}\right) \quad ,$$

so the change in the x-component of the normalized momentum is

$$\begin{aligned} \Delta(\beta\gamma)_x &= k_{x1} x \\ &= -\frac{\pi q E_0 T}{2 m_0 c^2 \overline{\beta}_1}\left[\left(1+\overline{\beta_1}^2\right)\frac{\cos\phi}{\pi} + \left(1-\overline{\beta_1}^2\right)\frac{\sin\phi}{2}\right] x \quad . \end{aligned}$$

The vertical impulse coefficient, k_{y1}, is the same as k_{x1}. In the above expression, $\overline{\beta_1}^2$ should actually be $\overline{\beta_1}\beta$, where $\beta = 2L/\lambda$, but the assumptions imply that $\overline{\beta_1} \approx \beta$.

The change in $\Delta(\beta\gamma)_z$ caused by a particle having a displacement z' from the center of the beam is

$$\begin{aligned} \Delta\left[\Delta(\beta\gamma)_z\right] &= k_{z1} z' \\ &= \frac{qL}{2 m_0 c^2 \overline{\beta}_1}\frac{\partial \overline{E_{z1}}}{\partial \phi}\frac{\partial \phi}{\partial z'} z' \\ &= \frac{q\pi E_0 T}{m_0 c^2 \overline{\beta}_1}\left(\frac{\sin\phi}{2} - \frac{\cos\phi}{\pi}\right) z' \quad , \end{aligned}$$

where

$$z = -\frac{L}{\pi}\Delta\phi \quad .$$

In the second half of a cavity, the averages of the field components are

$$\overline{E_{z2}} = 2E_0 T\left(\frac{\cos\phi}{2} - \frac{\sin\phi}{\pi}\right) \quad ,$$

$$\overline{E_{r2}} = \frac{\pi E_0 T}{L}\left(\frac{\cos\phi}{\pi} - \frac{\sin\phi}{2}\right) r \quad ,$$

$$\overline{B_{\theta 2}} = -\frac{\pi E_0 T \beta}{cL}\left(\frac{\cos\phi}{\pi} + \frac{\sin\phi}{2}\right) r \quad .$$

The energy change in the second half is

$$\Delta W_2 = qE_0 TL\left(\frac{\cos\phi}{2} - \frac{\sin\phi}{\pi}\right) \quad ,$$

and the average energy $\overline{W_2}$ and the corresponding $\overline{\beta_2}$ can be calculated. The impulse coefficients for the second half are

$$k_{x2} = -\frac{\pi q E_0 T}{2 m_0 c^2 \overline{\beta_2}}\left[\left(1 - \overline{\beta_2}^2\right)\frac{\sin\phi}{2} - \left(1 + \overline{\beta_2}^2\right)\frac{\cos\phi}{\pi}\right] \quad ,$$

$$k_{y2} = k_{x2} \quad ,$$

and

$$k_{z2} = \frac{\pi q E_0 T}{m_0 c^2 \overline{\beta_2}}\left(\frac{\sin\phi}{2} + \frac{\cos\phi}{\pi}\right) \quad .$$

APPENDIX I: TRANSVERSE EMITTANCE INCREASE FROM CHROMATIC ABERRATIONS

The focusing and defocusing forces acting on a particle passing through a magnetic quadrupole depend on the particle's momentum *p*. An energy spread can, therefore, cause an increase in the effective transverse emittance. This increase can be calculated if we approximate a quadrupole by a drift–thin lens–drift transformation. At the lens, the *x′*-coordinate of a particle having a momentum $p + \Delta p$ is modified by

$$x'_f = x'_i - k_x x_i / (1+\delta) \quad ,$$

where

$$\delta = \Delta p / p \quad ,$$

$$k_x = qB' \Delta s / m_0 c \beta \gamma \quad ,$$

and the i and f subscripts denote initial and final values. The quantity k_x is the impulse coefficient for a thin-lens equivalent for a quadrupole having a magnetic gradient *B′* and effective length Δs.

The second moments of the initial and final coordinates are related by

$$\overline{x_f^2} = \overline{x_i^2} \quad ,$$

$$\overline{x_f'^2} = \overline{x_i'^2} - 2k_x \overline{x_i x_i' / (1+\delta)} + k_x^2 \overline{x_i^2 / (1+\delta)^2} \quad ,$$

and

$$\overline{x_f x_f'} = \overline{x_i x_i'} - k_x \overline{x_i^2 / (1+\delta)} \quad .$$

The averages are calculated over the volume occupied by the hyperellipsoid representing the beam. Let $\overline{x_i x_i'}(\delta)$ denote the average of $x_i x_i'$ at a particular δ. Then

$$\overline{x_i x_i'} = \int_{-\hat{\delta}}^{\hat{\delta}} \overline{x_i x_i'}(\delta) f(\delta) d\delta \quad ,$$

where $\hat{\delta}$ is the maximum value of δ in the hyperellipsoid, and $f(\delta)$ is the density function that satisfies

$$\int_{-\hat{\delta}}^{\hat{\delta}} f(\delta)d\delta = 1 \quad .$$

If we assume a uniform ellipsoid in the x, x', δ space, then

$$f(\delta) = \frac{3}{4\hat{\delta}}\left[1-\left(\delta/\hat{\delta}\right)^2\right] \quad .$$

Also, if we assume x and x' are uncorrelated with δ, then the effect of a nonzero value of δ is to reduce the space available to x and x':

$$\overline{x_i x_i'}(\delta) \quad = \left[1-\left(\delta/\hat{\delta}\right)^2\right]\overline{x_i x_i'}(0) \quad .$$

Then

$$\begin{aligned}\overline{x_i x_i'} \quad &= \overline{x_i x_i'}(0)\frac{3}{4\hat{\delta}}\int_{-\hat{\delta}}^{\hat{\delta}}\left[1-\left(\delta/\hat{\delta}\right)^2\right]^2 d\delta \\ &= \frac{4}{5}\overline{x_i x_i'}(0)\end{aligned}$$

and

$$\begin{aligned}\overline{x_i x_i'/(1+\delta)} \quad &= \overline{x_i x_i'}(0)\frac{3}{4\hat{\delta}}\int_{-\hat{\delta}}^{\hat{\delta}}\frac{\left[1-\left(\delta/\hat{\delta}\right)^2\right]^2}{1+\delta}d\delta \\ &= \overline{x_i x_i'}(0)\left(\frac{12}{15}+\frac{4}{35}\hat{\delta}^2\right) \\ &= \overline{x_i x_i'}\left(1+\hat{\delta}^2/7\right) \quad .\end{aligned}$$

Repeating this procedure for calculating the other two averages, we find

$$\overline{x_i^2/(1+\delta)} \quad = \overline{x_i^2}\left(1+\hat{\delta}^2/7\right) \quad .$$

and

$$\overline{x_i^2/(1+\delta)^2} \quad = \overline{x_i^2}\left(1+3\hat{\delta}^2/7\right) \quad .$$

The second moments after the thin lens are

$$\overline{x_f^2} = \overline{x_i^2} \quad ,$$

$$\overline{x_f'^2} = \overline{x_i'^2} - 2k_x \overline{x_i x_i'}\left(1 + \hat{\delta}^2/7\right) + k_x^2 \overline{x_i^2}\left(1 + \frac{3}{7}\hat{\delta}^2\right) \quad ,$$

$$\overline{x_f x_f'} = \overline{x_i x_i'} - k_x \overline{x_i^2}\left(1 + \hat{\delta}^2/7\right) \quad .$$

If the original equation for x_f' is replaced by

$$x_f' = x_i' - k_x\left(1 + \hat{\delta}^2/7\right)x_i \quad ,$$

then the above second moments are obtained if a term $\Delta\overline{x_f'^2}$ is added to $\overline{x_f'^2}$, where

$$\Delta\overline{x_f'^2} = k_x^2 \overline{x_i^2}\left[\left(1 + \frac{3}{7}\hat{\delta}^2\right) - \left(1 + \hat{\delta}^2/7\right)^2\right] \quad .$$

The increase in the square of the rms emittance is

$$\Delta\varepsilon_{rms}^2 = \overline{x_f^2}\,\Delta\overline{x_f'^2}$$

$$\approx \left(\overline{x_i^2} k_x \hat{\delta}\right)^2 \Big/ 7$$

ICHROM is the variable that turns on or off the calculation of chromatic aberrations. ICHROM = 0 turns the calculation off and ICHROM = 1 turns the calculation on.

APPENDIX J: CALCULATION OF TRANSVERSE EMITTANCES FOR BEAM-WIDTH MEASUREMENTS AT THREE LOCATIONS

If the width of the beam is measured at three separate locations, and if the transfer matrices between these locations are known, then the transverse emittances and ellipse parameters can be calculated. Let σ^m denote the σ-matrix at the mth measurement location, where m is 1, 2, or 3. The measurements define the 1,1 and 3,3 elements at each location. The unknown quantities are σ_{12}, σ_{22}, σ_{34}, and σ_{44} at each location. But if these quantities are known at any of the three locations, they can be calculated at the other two locations using the assumed known transfer matrices.

Let σ^1 denote the initial estimate of the σ-matrix at the first measurement location, and δ denote the (unknown) correction matrix for σ^1. That is, the actual σ-matrix at the first measurement is $\sigma^1 + \delta$. Because σ^1_{11} and σ^1_{33} are given by the measurement, the only nonzero elements of the δ-matrix are δ_{12} (= δ_{21}), δ_{22}, δ_{34} (= δ_{43}), and δ_{44}. Let R denote the transfer matrix from the first to the second measurement location, and r_{ij} be the i, j^{th} element of this matrix. Then

$$\sigma^2 = R\sigma^1 R^T + R\delta R^T$$

From measurements at the second location, σ^2_{11} and σ^2_{33} are known, giving two equations to be satisfied by the elements of the δ-matrix:

$$\left[\sigma^2 - R\sigma^1 R^T\right]_{11} = 2r_{11}r_{22}\delta_{12} + r_{12}^2\delta_{22} + 2r_{13}r_{14}\delta_{34} + r_{14}^2\delta_{44} \quad ,$$

and

$$\left[\sigma^2 - R\sigma^1 R^T\right]_{33} = 2r_{31}r_{32}\delta_{12} + r_{32}^2\delta_{22} + 2r_{33}r_{34}\delta_{34} + r_{34}^2\delta_{44} \quad .$$

Two similar equations exist for the beam measurements at the third location in terms of the σ^1- and δ-matrix elements and the transfer matrix between the first and third locations. The elements of the δ-matrix can be determined from these four linear equations.

When space-charge forces are involved, an iterative procedure must be used because the transfer matrices depend on the beam profiles. In TRACE 3-D, the zero-current solution is used as the first step in the iteration. Successive steps use the previously determined σ^1-matrix as the input beam to be followed through the transport system to the measurement locations.

APPENDIX K: NOTES ON TRACE 2-D

The original version of TRACE was two dimensional, and is documented in the referenced report.* There is a new 2-D version of TRACE, patterned after TRACE 3-D, to which the following notes apply.

1. The total emittance of the equivalent K-V beam (the beam that is followed by TRACE 2-D) in each phase plane is four times the rms emittance in that plane, and the displayed beam envelopes are $\sqrt{4}$ - times their respective rms values.
2. For chromatic aberrations, the momentum spread must be input as follows:

$$dpop = \sqrt{4} \cdot 1000 \cdot \frac{dp}{p}\Big|_{rms}$$

and, same as TRACE 3-D, ICHROM = 1 turns chromatic aberrations on, ICHROM = 0 turns chromatic aberrations off.

The new TRACE 2-D version is patterned after TRACE 3-D, with the following features:

- 5x5 *R*-matrix
- 5x5 σ-matrix
- Easy to modify

It is especially useful for finding matched input for RFQs, and for designing and tuning low-energy beam-transport systems (LEBTs). It has the following matching and optimization capabilities:

1. Determine Matched Ellipse Parameters

MT	Matched Ellipse Parameters
1	α_x, β_x, α_y, β_y
2	β_x, β_y (α_x=0, α_y=0)

2. Find Values of Transport Elements to Produce Ellipse Parameters

MT	Produce Specified Values
3	α_x, β_x
4	α_y, β_y

* Documentation for TRACE: An Interactive Beam-Transport Code, Los Alamos National Laboratory report LA-10235-MS (January 1985), K.R. Crandall, D.P. Rusthoi

5	$\alpha_x, \beta_x, \alpha_y, \beta_y$

TABLE K-1: TRACE 2-D TRANSPORT ELEMENTS

Element	Type Code	Parameters
Drift	1	L
Thin lens	2	f_x, f_y
Quadrupole	3	B', l
PMQ	4	B', l, r_i, r_o
Solenoid	5	B, l, I, J
Doublet	6	B', l, d
Triplet	7	B'_o, l_o, d, B'_i, l_i
Bend	8	α, ρ, n
Edge	9	β, ρ, g, K_1, K_2
Column	10	L, ΔW, r_1, r_2, B
RFQ Cell	11	V/r_0^2, AV, L, ϕ_0, $type$
Current Change	12	ΔI
Magnetic Ramp	13	B_1, B_2, L
Special	14	L, - -
Rotation	15	Θ

There are fewer commands for TRACE 2-D, but those that are available correspond to those of TRACE 3-D with the exception of the "Q" command, which in TRACE 2-D, determines the matched input into the radial matching section of an RFQ.

TRACE 2-D and TRACE 3-D Use With RFQ Accelerators

TRACE 2-D and TRACE 3-D define RFQ cells with the following parameters:

- NT(n) = 11, A(1,n) = V/r_0^2, AV, L, ϕ_0, *type*;
- V is the maximum intervane potential difference in kV (vane voltage varies from $-V/2$ to $+V/2$);
- r_0^2 is the average vane displacement in mm;
- A is the acceleration efficiency;
- L is the cell length in mm;
- ϕ_0 is the phase of the RF in degrees (typical value is –90 at the RFQ entrance and –40 at the RFQ exit);
- *type* is one of the following:

  0 = standard cell, no acceleration (length = $\beta\lambda*0.5$)
  1 = standard cell with acceleration
  2 = fringe field, no acceleration
  - entrance fringe fields have length = N*$\beta\lambda*0.5$, where N=6 is typical
  - exit fringe fields have length <$\beta\lambda*0.5$ (the length is such that no net energy change occurs --- typical length is 0.15*$\beta\lambda$)

  3 = fringe field with acceleration

In the following example, all discussion will be about types 0 and 2. Let cell ONE be defined as the first cell after the end of the RFQ entrance fringe field. Let cell LAST be defined to be the last cell before the start of the RFQ exit fringe field.

A. Procedure to Find a Matched Beam Into an RFQ

An input file might look like this:

```
A(1,1) =   10.0,    0.0,    25.0,       0.0,    2.0
A(1,2) =   10.0,    0.0,    2.50,       0.0,    2.0
A(1,3) =  –10.0,    0.0,    25.0,    –180.0,    2.0
```

Note: A(1,1) and A(1,2) have the same sign because the fringe field in this example has length = EVEN NUMBER*0.5*$\beta\lambda$. RFQ parameters for all three lines come from cell ONE (except fringe length). For this procedure, ϕ_0 on lines 1 and 2 must be set to zero. ϕ_0 on line 3 is set in the manner described in Section 6.11.

Using TRACE 2-D, set MT = 1, N1 = 2, N2 = 3. Use the "M" command until convergence occurs. Now use the "Q" command. TRACE 2-D will print averaged values for the Twiss parameters. These describe the matched beam at the entrance to the fringe section.

A. Procedure to Find a Matching Section from an RFQ to a DTL

An input file might start like this:

```
A(1,101) =   10.0,   10.0,    25.0,     –40.0,     0.0
A(1,102) = –10.0,    10.0,    25.0,   –180.0,      0.0
A(1,103) =   10.0,   10.0,     5.0,   –180.0,      2.0
```

Note: RFQ parameters for all three lines come from cell LAST (except fringe length). The input file would next contain quadrupoles and bunchers to make up the matching section. The input file would end with elements to make up two DTL cells. These two cells would have the acceleration turned off and use the parameters from the first DTL cell.

Using TRACE 3-D, set MT = 4, N1 = 101, N2 = 102. Use the "M" (or "N") command until convergence occurs. Set N2 = 103, and issue the "G". Save BEAMO in storage position 1 (it is your starting beam for element 104). Set MT = 4 or 3, N1 = DTL cell 1 starting position, N2 = DTL cell 2 ending position. Again, use the "M" (or "N") command until convergence occurs. Save this beam in storage position 2 (it is your matching sections' goal). Retrieve beam from storage position 2 and place in BEAMF.

Now retrieve beam from storage position 1 and place in BEAMI. Set N1 = 104, N2 = position just before DTL cell 1 starting position. Set MT = 9 and declare six matching variables (MP array). Use the "M" command until convergence occurs. Your matching section design is now complete.

Suggestions: Matching section quads should have approximately the same spacing as the DTL quads. Finding a matching section will be easier if your RFQ and DTL both were designed to have similar phase advances per length (not per focusing period). Recall a DTL cell length is $\beta\lambda$, and a RFQ cell is $\beta\lambda/2$.

APPENDIX L: TRACE 3-D GRAPHICS

The TRACE 3-D code was originally written for a Tektronix storage scope 4014 terminal, using the PLOT10 Tektronix Terminal Control System (TCS) Graphics package. Only low-level graphics routines are used (viz., calls to move, draw, plot a point, output a character string, call up the graphic cursor (crosshairs), and revert to the alphanumeric cursor. There are sixteen PLOT10 calls: four perform terminal initialization, four function to call up the graphic cursor crosshairs, three are rather nonessential (one rings the terminal bell, one erases the terminal, one terminates the program), and the remaining five calls do the real work of moving, drawing, plotting a point, outputting a character string, and reverting the cursor to alphanumeric mode. The sixteen external graphics calls are in ten short separate subroutines at the end of the code so that they may be easily replaced. These subroutines, along with the external graphic calls and their functions, are listed in Table L-1.

TABLE L-1: TRACE 3-D Graphics Subroutines

TRACE 3-D Subroutine	External Calls (PLOT10 Graphics)	Functions
1. INIT	call initt (960)	Initializes terminal, erases screen, alphanumeric mode
	call term (3,4096)	Identifies terminal type (4014) and no. of addressable points in screen units (x = 0–4096; y = 0–3100)
	call chrsiz (4)	Sets alphanumeric character size (to smallest)
	call csize (icsh,icsv)	Returns value of character size in screen units
2. POINT	call pntabs(x,y)	Plots a point at screen coordinates x, y
3. DRAW	call drwabs(x,y)	Draws a line to screen coordinates x, y
4. MOVE	call movabs(x,y)	Moves the alpha cursor to screen coordinates x, y
5. WRTSS	call aoutst (nc,ibuf)	Character string output -- outputs first "nc" characters from the "ibuf" array
6. CURSOR	call scursr (ich,ix,iy)	Activates graphic cursor (pulls up crosshairs)
	call kluge *	Supporting routine (fixes a bug in PLOT10)
	call home *	Supporting routine (upper left-hand corner)
	call tsend *	Supporting routine (dumps output buffer)
7. ALMODE	call anmode *	Puts terminal in alphanumeric mode
8. ERACE	call erase *	Erases screen
9. BEL	call bell **	Rings the terminal's bell
10. FINISH	call finitt (x,y) *	Moves cursor to given screen position and exits
11. BLOCK DATA INITG (no calls)		Sets margins of plots based on PLOT10 screen units

* Unnecessary on other graphics systems ** Nonessential

Two additional calls to obtain the date and time are also placed at the end of the code for ease of replacement in case they are system-dependent. They are nonessential calls.

If using PLOT10, and depending on whether a machine addresses a 16-, 32-, or 64-bit word, a change may need to be made in Subroutine WRTSS. The character text written in the graphics area is loaded into an integer array through an internal READ statement based on 32-bit addressing (four characters to an integer). An adjustment in the format of the internal READ statement may need to be made for other word lengths as follows:

```
16-bit addressing:    READ (CBUF, '(20 A2)' ) IBUF
32-bit addressing:    READ (CBUF, '(20 A4)' ) IBUF
64-bit addressing:    READ (CBUF, '(20 A8)' ) IBUF
```

On UNIX workstations, we provide a file of routines that completely replace the routines in the PLOT10 library. The new routines generate PostScript output. Graphical output is displayed on a separate window by means of a PostScript viewer (ghostscript).

For PC and Macintosh platforms, the essential PLOT10 calls are replaced with a PGPLOT library (see Table L-2). The PGPLOT Graphics Subroutine Library is a FORTRAN-callable, device-independent graphics package developed at Caltech having wide applicability. The PGPLOT library consists of two major parts: a device-independent part, which is written in portable FORTRAN-77, and a set of device-dependent "device handler" subroutines for output on various terminals, image displays, printers, etc. PGPLOT is written mostly in standard FORTRAN-77, and has been tested under a variety of platforms (UNIX, VMS), and is available for a number of other operating systems including NeXTstep, DOS, Windows, Windows/NT, Macintosh OS. The PGPLOT routines and information about PGPLOT may be obtained from the PGPLOT Graphics Subroutine Library Website address: http://astro.caltech.edu/~tjp/pgplot/.

TABLE L-2: PGPLOT Replacement Routines

TRACE 3-D Subroutine	**External PGPLOT Replacement Calls**
1. INIT	call pgbeg
	call pgenv
	call pgsch
	call pgqcs
2. POINT	call pgpt
3. DRAW	call pgdraw
4. MOVE	call pgmove
5. WRTSS	call pgtext
6. CURSOR	call pgcurs
	call pgupdt
8. ERACE	call pgeras
10. FINISH	call pgend

APPENDIX M: SPECIAL MACINTOSH VERSION OF TRACE 3-D

PowerTrace™ and MacTrace™ are sophisticated graphical user interfaces for use with TRACE 3-D. The interface is based on the Shell for Particle Accelerator Related Codes (S.P.A.R.C.) software technology. Problem setup and definition are accomplished graphically.* All of the transport elements available in TRACE 3-D, as well as the initial and final beam emittance (Twiss) parameters, are represented by icons on a scrollable palette. The configuration of a beam line is set up visually by selecting and dragging the desired icons to a model window. Parameter values are entered into data windows (seen in Fig. L-1) for each element in the beam line. PowerTrace and MacTrace take care of setting up arrays and similar bookkeeping. There is a minimal amount of alpha-numeric (keyboard) input used for setting parameter values, and no text or command line input is required. Expert system rules are built into the data input windows to assist users in assigning parameter values.** These include

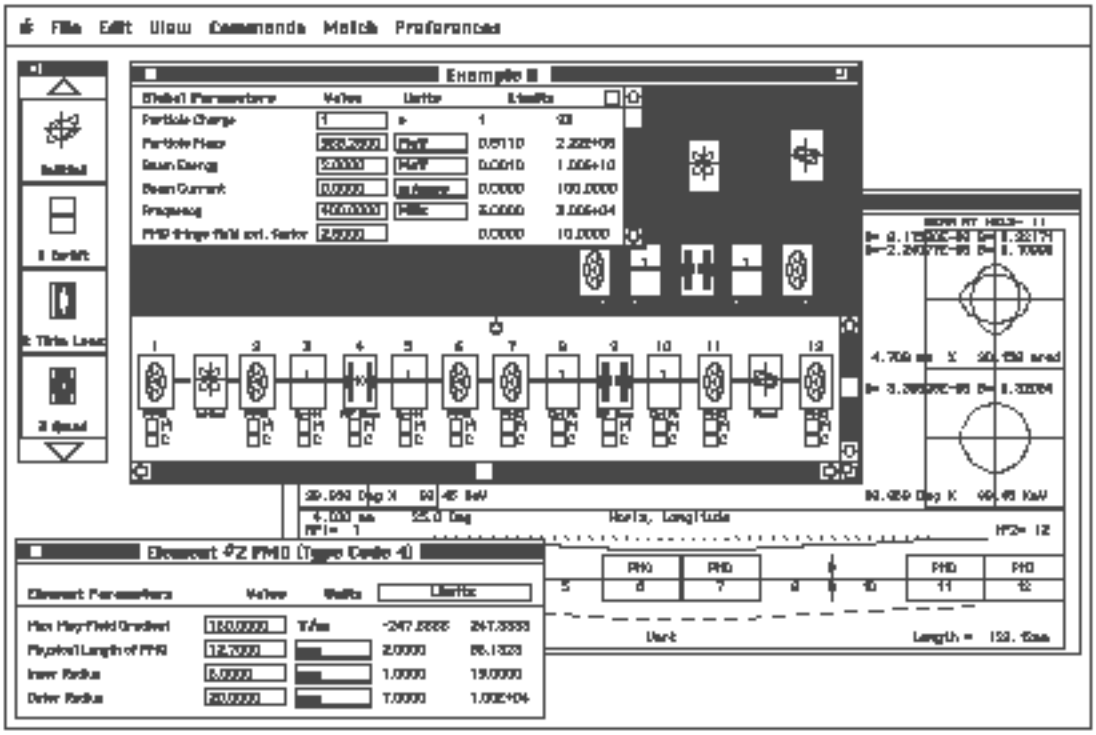

Fig. M-1. Sample Windows from PowerTrace

* G. H. Gillespie and B. W. Hill, "A Graphical User Interface for TRACE 3-D Incorporating Some Expert System Type Features." 1992 Linear Accelerator Conference Proceedings (Ottawa) AECL-10728, 787-789 (1992).

** G. H. Gillespie, P. K. Van Staagen and B.W. Hill, "Knowledge Rule Base for the Beam Optics Program TRACE 3-D." Proceedings of the 1993 Particle Accelerator Conference 1, 86-89 (1993).

options for parameter units, both fixed and scaled smart units, and limit guidelines for each parameter. The limits incorporate constraints imposed by TRACE 3-D and practical constraints derived from hardware experience. PowerTrace is fully integrated with TRACE 3-D and is optimized for performance on all PowerPC computers running the Mac O/S. MacTrace is also fully integrated with TRACE 3-D and runs standalone on any Apple Macintosh computer. The standard version of TRACE 3-D, maintained by the Los Alamos Accelerator Code Group, has been ported to the Macintosh; the source code is included with both PowerTrace and MacTrace under a license agreement with the Los Alamos National Laboratory. The interface was developed by The MACcelerator Project in Del Mar, California.

APPENDIX N: WAKEFIELDS IN THE TRACE 3-D CODE*

There is a separate version of TRACE 3-D that can simulate some nonlinear effects, such as wakefields, that are related to the variation of the beam bunch along the longitudinal direction. This wakefield code is compatible with the usual version described in this manual in that it will produce the same results as the usual code for problems not involving wakefields. The two codes may be merged in the future.

In the wakefield code, the beam bunch is divided into a number of slices longitudinally. We describe each slice by its 6-D centroid and 6x6 σ-matrix, and follow the collection of centroids and σ-matrices down the beamline. Whenever the code needs to generate output or to compute space charge, it combines the slices into a single 6-D centroid and 6x6 σ-matrix. Then it uses the existing mechanisms in the code to generate output or compute space charge. The centroids and σ-matrices of the bunch slices are transported as usual by the various elements in the beamline. However, space charge and the new wakefield elements get a modified treatment. In the case of space charge, we take into account the effect of space charge on the slice centroids. Of course, the overall centroid is not affected by space charge. Wakefield effects are taken into account with new zero-length elements, similar to how bend edges are handled. The wakefield element parameters specify wakefield functions, which determine forces acting on a given bunch slice caused by slices ahead of the given bunch slice. There are three wakefield elements, for monopole, dipole, and quadrupole wakefields. These wakefield elements are user-specified elements and may easily be changed to model other effects that depend on longitudinal position within a beam bunch. Unlike some existing particle codes, this approach allows for the distance between bunch slices to vary throughout the simulation. This is important if we want to study wakefield effects in a regime where space charge is important.

---

* W.P. Lysenko, D.P. Rusthoi, K.C.D. Chan, G.H. Gillespie, and B.W. Hill, "Wakefields in the TRACE 3-D Code," Proceedings of the 18th International Linac Conference held August 26-30, 1996 in Geneva, Switzerland, and

W.P. Lysenko, D.P. Rusthoi, K.C.D. Chan, G.H. Gillespie, and B.W. Hill, "TRACE 3-D Code Improvements," Proceedings of the 1996 Computational Accelerator Physics Conference held September 24-27, 1996 in Williamsburg, Virginia.

APPENDIX O: TRACE 3-D ON-LINE HELP PAGES

```
    TRACE3D HELP:  INPUT PARAMETERS   (Type "H" for Help, p.2)
   (Enter data in NAMELIST fashion--fields separated by commas)

TRANSPORT SYSTEM:
-----------------
  NT(300)  - transport system element types
  A(5,300) - element parameters (see HELP, p.3)
  FREQ     - frequency of the rf in MHz
  ICHROM   - chromatic aberation flag---thin lens (if nonzero)
  PQEXT    - permanent quad field extension factor (def=2.5)

BEAM CHARACTERISTICS:
---------------
  BEAMI(6) - initial ellipse parameters (Ax,Bx,Ay,By,Az,Bz)
  EMITI(3) - initial emittances in proper phase spaces
  BEAMCI(6)- initial beam centroid offsets (mm, mrad)
  W        - kinetic energy (MeV)
  ER       - rest mass of beam particles (MeV)
  Q        - charge of beam particles
  XI       - effective beam current or space charge (mA)
  SIGI(6,6)- array containing the initial sigma matrix

CONTROL PARAMETERS:
-------------------
  N1       - number of starting element for trace
  N2       - number of final element for beam trace
  SMAX     - max step size(mm) for most dynamics calc
  PQSMAX   - max step size (mm) near PMQs
  IBS      - flag telling how init sigma matrix is generated
  NEL1     - Initial ellipse printout element (def=N1)
  NEL2     - Final ellipse printout element (def=N2)

MATCHING PARAMETERS:
--------------------
  MT       - specifies type of matching desired
  NC       - number of conditions to be satisfied by matching
  MP(2,6)  - parameter #, element #, for match variables (MT=5-12)
  MPE(6)   - alternate input for matching element #'s (MT=5-12)
  MPP(6)   - alternate input for matching parameter #'s (MT=5-12)
  CMV(6)   - alternate input to Couple Matching Variables
  MVC(2,6) - indices of coupled parameters and type of coupling
  BEAMF(6) - values desired for ellipse parameters at N2 (MT=5-12)
  DELTA    - convergence criteria (def=.0001)
  IJM(2,6) - indices for R-/Sigma- matrix terms for MT=10,11
  VAL(6)   - desired R-/Sigma- matrix values for MT=10,11
             or desired phase advances for MT=14
  IPLANE(3)- 1=X-X', 2=Y-Y', 3=Z-dp/p planes for MT=14
  NIT      - number of iterations during matching (default=10)

GRAPHIC DISPLAY:
---------------
  NP1,NP2  - sets limits for graphic profile (initial def=N1,N2)
  XM       - set limits in transverse phase-space plots (mm)
  XMI,XMF  - sets separate limits (initial,final) for XM above
  XPM      - limits for transverse phase-space plots (mrad)
  XPMI,XPMF- sets separate limits (init,final) for XPM above
  YM       - sets limit for the transverse profile plot (mm)
  XC       - sets limit for displaced beam center plot (mm)
  DPM      - limit the longitudinal phase-space plots (deg)
  DPMI,DPMF- sets separate limits (init,final) for DPM above
  DWM      - limits the longitudinal phase-space plots (KeV)
  DWMI,DWMF- sets separate limits (init,final) for DWM above
  DPP      - limit on longitudinal phase-profile plot (deg)
```

```
     TRACE3D HELP, p.2, V59   7-MAR-97   (Type "H" for Help, p.3)
OTHER:
-----
  NPRIN        - number of parameters to print (max=20)
  IJPRIN(2,20)- parameter #, element #, for printout values
  PE(20)       - alternate input for printout element #'s
  PP(20)       - alternate input for printout parameter #'s
  NEXTRA       - number of extra parameters in storage space
  EXTRA(10)    - array of extra parameters printed on graph
  CMT(300)     - data file comments for each element (max 8 char)
  COMENT       - data file comment for entire file (max 60 char)

            COMMAND DESCRIPTIONS
            --------------------
  "A"  (ADD)         - ADD ELEMENTS IN BEAM LINE
  "B"  (BEAM)        - PRINT BEAMS, BEAMS STORED IN HOLD ARRAYS
  "C"  (PARMILA)     - PRINT BEAM PARAMETERS IN PARMILA UNITS
  "D"  (DELETE)      - DELETE ELEMENTS FROM BEAM LINE
  "E"  (END)         - TERMINATE THE PROGRAM
  "F"  (PHASE)       - CALCULATE AND PRINT PHASE ADVANCE
  "G"  (GRAPH)       - GRAPH BACKGROUND & TRACE BEAM PROFILE
  "H"  (HELP)        - COMMANDS, INSTRUCTIONS, INPUT PARAMETERS
  "I"  (INPUT)       - ENTER NEW PARAMETERS
  "J" (PROJECTIONS)- PLOT INIT AND FINAL PROJS ON X-Y, X-Z, X-dP/P
  "K"  (PERIODIC)    - GENERATE A PERIODIC SYSTEM (RFQ or DTL)
  "L"  (ELLIPSE)     - FIND EMIT ELLIPSES FROM PROFILE MEASUREMENTS
  "M"  (MATCH)       - PERFORM MATCHING SPECIFIED BY MT PARAMETER
  "N"  (MATCH)       - MATCH AS IN "M" WITHOUT ITERATION PRINTOUT
  "O"  (MISMATCH)    - CALCULATE AND PRINT MISMATCH FACTORS
  "P"  (PRINT)       - PRINT DATA FILE
  "Q"  (QUERY)       - DISPLAY DATA FOR ONE ELEMENT
  "R"  (R-MATRIX)    - PRINT R-MATRIX FROM LATEST RUN
  "S"  (SAVE)        - SAVE DATAFILE
  "T"  (TRACE)       - TRACE BEAM OVER EXISTING GRAPHICS
  "U"  (USER)        - SEARCH/SET MATCH PARAMETER RANGES (MT=7,8,9)
  "V"  (VARIABLES)   - DISPLAY VALUES OF MATCHING VARIABLES
  "W"  (PHI-W)       - PRINT PHASE AND ENERGY INFORMATION
  "X"  (EXCHANGE)    - EXCHANGE BEAM VALUES AND BEAM HOLD ARRAYS
  "Y"  (NOTE)        - WRITE NOTE ON OUTPUT (MANUAL POSITIONING)
  "Z"  (SIGMA)       - DISPLAY MODIFIED SIGMA MATRIX
  "?"  (MINIHELP)    - DISPLAY ELEMENT PARAMETER INFORMATION
  "!"  (UNMATCH)     - RESTORE PREMATCH VALUES
  "@"  (APERTURE)    - OPEN/CLOSE PROFILE/APERTURE DATA FILE
  "#"  (NEWFILE)     - READ IN NEW DATA FILE
  "*"  (CENTROID)    - PRINT BEAM CENTROID INFORMATION
  "&"  (COMMENT)     - DISPLAY COMMENT WRITTEN IN DATA FILE

            TRANSPORT SYSTEM - ELEMENT TYPES  (NT)
            --------------------------------------
   A maximum of 300 elements of the types below, indicated by "NT=",
 may be entered in a beamline.  Number of parameters for each element
 is given in parenthesis (see HELP p.3 for parameter descriptions):

    NT= 1,  DRIFT (1)                  NT=10,  RF GAP  (5)
    NT= 2,  THIN LENS (3)              NT=11,  RFQ CELL (5)
    NT= 3,  QUADRUPOLE (5)             NT=12,  RF CAVITY (3)
    NT= 4,  PMQ (4)                    NT=13,  CC TANK (4)
    NT= 5,  SOLENOID (2)               NT=14,  WIGGLER (5)
    NT= 6,  DOUBLET (3)                NT=15,  ROTATE/OFFSET (4)
    NT= 7,  TRIPLET (5)                NT=16,  REPEAT (1)
    NT= 8,  BENDING MAGNET (4)         NT=17,  USER 1 (1)
    NT= 9,  EDGE ANGLE (5)             NT=18,  USER 2 (1)
```

```
 TRACE3D HELP, p.3, V59   7-MAR-97   (Type "H" for Help, p.4)

     ELEMENTS       DESCRIPTION OF PARAMETERS
     --------       -------------------------

1    DRIFT          A(1,n) - L .... length [mm]
                    ----------------------------------------------------
2    THIN LENS      A(1,n) - Fx ... focal length in X [mm]
                    A(2,n) - Fy ... focal length in Y [mm]
                    A(3,n) - Fz ... focal length in Z [mm]
                    ----------------------------------------------------
3    QUADRUPOLE     A(1,n) - B'.... magnetic field gradient [T/m]
                    A(2,n) - L .... effective length [mm]
                    A(3,n) - x, phi (depends OF) max or limit [mm or deg]
                    A(4,n) - y .... max or limit [mm]
                    A(5,n) - OF.... offset flg: 0=none 1=displ 2=rot (-=rndm)
                    ----------------------------------------------------
4    PMQ            A(1,n) - B'.... max magnetic field gradient [T/m]
                    A(2,n) - L .... physical length of PMQ [mm]
                    A(3,n) - r(i).. inner radius [mm]
                    A(4,n) - r(o).. outer radius [mm]
                    ----------------------------------------------------
5    SOLENOID       A(1,n) - B .... magnetic field [gauss]
                    A(2,n) - L .... effective length [mm]
                    ----------------------------------------------------
6    DOUBLET        A(1,n) - B'.... magnetic field grad. (upstream) [T/m]
                    A(2,n) - L .... effective length (each)  [mm]
                    A(3,n) - d .... distance btw quads  [mm]
                    ----------------------------------------------------
7    TRIPLET        A(1,n) - B'o .. magnetic field grad. (outer Qs) [T/m]
                    A(2,n) - L .... effective length (outer Qs)  [mm]
                    A(3,n) - d .... distance btw inner & outer quads [mm]
                    A(4,n) - B'i .. magnetic field grad. (inner Q) [T/m]
                    A(5,n) - L .... effective length (inner Q)  [mm]
                    ----------------------------------------------------
8    BEND           A(1,n) - Alpha  angle of bend [deg]
                    A(2,n) - Rho .. radius of central trajectory [mm]
                    A(3,n) - n .... field gradient index
                    A(4,n) - VF ... vertical flag (0=horiz.)
                    ----------------------------------------------------
9    EDGE           A(1,n) - Beta . pole-face rotation angle [deg]
                    A(2,n) - Rho .. radius of central trajectory [mm]
                    A(3,n) - g .... total gap [mm] (negative if vert. bend)
                    A(4,n) - K1 ... fringe-field factor (def=0.45)
                    A(5,n) - K2 ... fringe-field factor (def=2.80)
                    ----------------------------------------------------
```

```
  TRACE3D HELP, p.4, V59   7-MAR-97   (Type "H" for Help, p.5)

      ELEMENTS       DESCRIPTION OF PARAMETERS  (Con't)
      --------       -------------------------

10    RF GAP         A(1,n) - EoTL . effective gap voltage [MV]
                     A(2,n) - PHIs . phase of rf [deg]
                     A(3,n) - egf .. emittance growth flag (0=no growth)
                     A(4,n) - dWf .. energy gain flag (0=no gain)
                     A(5,n) - h .... harmonic (def=1.0)
                     ------------------------------------------------------
11    RFQ CELL       A(1,n) - V/Ro2  max intervane pot. factor [kV/mm]
                     A(2,n) - AV ... prod accel eff & max intervane V [kV]
                     A(3,n) - L .... cell length  [mm]
                     A(4,n) - PHIo . phase of rf [deg]
                     A(5,n) - type . 0,1,2,3  (0=std cell, no accel)
                     ------------------------------------------------------
12    RF CAVITY      A(1,n) - Eo ... average accelerating field [MV/m]
                     A(2,n) - L .... length [mm]
                     A(3,n) - PHIs . phase of rf [deg]
                     ------------------------------------------------------
13    TANK           A(1,n) - EoT .. effective acceleration gradient [MV/m]
                     A(2,n) - L .... length [mm]
                     A(3,n) - PHId . injection/exit phase [deg]
                     A(4,n) - Nc ... number of identical cavities
                     ------------------------------------------------------
14    WIGGLER        A(1,n) - L .... total length of wiggler [mm]
                     A(2,n) - B .... magnetic field of magnets [gauss]
                     A(3,n) - g .... total magnetic gap in wiggler [mm]
                     A(4,n) - l .... length of each magnet [mm]
                     A(5,n) - s .... distance between magnets [mm]
                     ------------------------------------------------------
15    ROTATE/OFFSET  A(1,n) - Theta  rotation angle in chosen plane [deg]
                     A(2,n) - Plane  1=x-y, 2=y-z, 3=z-x (def=1)
                     A(3,n) - d1 ... dx for plane=1,3; dy for plane=2 [mm]
                     A(4,n) - d2 ... dy for plane=1 [mm]
                     ------------------------------------------------------
16    REPEAT         A(1,n) - n .... sequence number of repeat element
                     ------------------------------------------------------
17    USER 1         A(1,n) - l .... total length of user 1 element
                     ------------------------------------------------------
18    USER 2         A(1,n) - l .... total length of user 2 element
```

TRACE3D HELP, p.5, V60 28-MAR-97 (Type "H" for Help, p.1)

TYPES OF MATCHING

Type (MT)	Desired Values at N2	How Specified	
1	Matched Beam, X,Y Planes		
2	Matched Beam, Z Plane	Enter Match Type Only (BEAMI is Varied)	
3	Matched Beam, X,Y,Z Planes (Upright)		
4	Matched Beam, X,Y,Z Planes		
		Desired Beam	Elements to Vary
5	Fitting in X Plane	BEAMF(1-2)= Ax,Bx	MPE(1)=element#
6	Fitting in Y Plane	BEAMF(1-2)= Ay,By	MPP(1)=parameter#
7	Fitting in Z Plane	BEAMF(1-2)= Az,Bz	MPE(2)=element#
8	Fitting in X,Y Planes	BEAMF(1-4)= Ax,Bx, Ay,By	MPP(2)=parameter# MPE(3)=element# MPP(3)=parameter# MPE(4)=element# MPP(4)=parameter#
9	Fitting in X,Y,Z Planes	BEAMF(1-6)= Ax,Bx, Ay,By,Az,Bz	MPE(5)=element# MPP(5)=parameter# MPE(6)=element# MPP(6)=parameter#
10	Fitting for R-Matrix Elements	IJM(2-6)= indices of R- or S-Matrix elements; VAL(1-6) = corresponding desired values of matrix elements	(MPP defaults on 1) No. Conditions, NC, No. Variables, NV, set automatically except MT=10,11,14
11	Fitting for Sigma-Matrix Elements		
12	Fitting for Round Beam	---NA---	
13	Fitting in X,Y,Z Planes	BEAMF(1-6)= Ax,Bx, Ay,By,Az,Bz	(BEAMI is varied)
14	Fitting for Specified Phase Advance in Specified Planes	Enter IPLANE, VAL, and No. of Phase Planes in NC (<=3)	Declare elements to vary as in MT=5-12 above

TO COUPLE MATCHING VARIABLES (CMV) --

Sample input to couple a matching variable with another element (entered in the Input Mode, using quotes as shown):

```
CMV(1) = 'A(1,18)'
CMV(3) = '-A(1,24)'
```

couples the first matching variable DIRECTLY with element #18, parameter #1 and the third matching variable INVERSELY with element #24, parameter#1